INSTRUCTION MANUAL

Taylor

Windsor Model 110C

Resistance Capacity Bridge

TAYLOR ELECTRICAL INSTRUMENTS LTD

MONTROSE AVENUE · SLOUGH · BUCKS · ENGLAND

Telephone: SLOUGH 21381 Telegrams: TAYLINS, SLOUGH

Instruction Manual

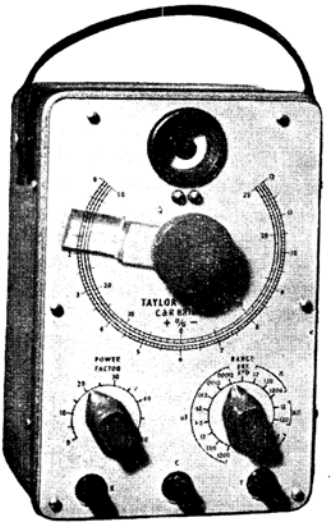

TAYLOR

Model 110C

Resistance Capacity Bridge

TERMINALS.—There are three terminals :—

(e) Test. The two right-hand terminals are used for all Capacity and Resistance measurements, and all three terminals for comparator.

"MAGIC-EYE" VALVE.

At the top of the instrument on the dial is the Cathode-Ray indicator, usually known as the "Magic-eye". This is used to indicate when the bridge is in balance.

CAPACITY MEASUREMENT

After setting the Mains Adjustment correctly, plug the instrument into the mains socket. Couple the capacity to be checked to the Test terminals and set the range switch on the most suitable range. Turn the Power Factor Control to zero and after about ten seconds the "magic-eye" valve will show a green light with a blurred shadow at about 12 o'clock position. Rotate the Dial Control until clear "V" shadows are obtained. If the shadows are not sharp adjust the Dial Control for maximum clarity and then adjust the Power Factor Control until a clear shadow is obtained. It may be necessary in the case of condensers with a large power factor to readjust the Dial control for maximum sharpness.

The capacity can then be read directly from the instrument dials. Thus if the condenser reads 8·2 (82 divisions) on the dial while set on the 0·12 uF range the capacity would be 0·082 ufd.

On the lowest capacity range there is a circuit capacity of approximately 3 pf, this must be subtracted when testing very small capacities.

CAPACITY	Max. Reading	Value per division
	·00012 mfd.	·000001 mfd.
	·0012 mfd.	·00001 mfd.
	·012 mfd.	·0001 mfd.
	0·12 mfd.	·001 mfd.
	1·2 mfd.	·01 mfd.
	12 mfd.	0·1 mfd.
	120 mfd.	1 mfd.
	1,200 mfd.	10 mfd.

POLARIZING VOLTS.

When it is desired to check an electrolytic condenser while subject to a polarizing voltage, connect the polarizing battery between one condenser lead and the "C" terminal. The battery must have a low resistance otherwise a higher value of power factor will be obtained.

RESISTANCE MEASUREMENTS

The same procedure must be used as with capacity measurements except that the instrument must be switched to "RES," and the Power Factor control can be ignored. On the 12 ohms range the instrument will measure up to 12 ohms and each division represents 0·1 ohm. On the next range the maximum reading is 120 ohms and each division represents 1 ohm and so on. As all measurements are made at 50 cycles, any inductance of self capacity in the component under test will alter its impedance and make it difficult to get a sharp shadow.

GENERAL

CIRCUIT.—The instrument is a mains-operated A.C. bridge having eight ranges of Capacity and eight ranges of Resistance measurement. A conventional bridge circuit is used and when measuring Capacity, an internal standard capacity with a variable series resistance constitutes one arm of the bridge. The other arms comprise a variable resistance calibrated 0-12 and a fixed resistor. The condenser under test makes the fourth arm of the bridge. A.C. volts from a 40v. screened secondary winding of the mains transformer are applied to the bridge and the out of balance voltage is amplified by a 6J5 Valve which is resistance-coupled to a double sensitive "Magic-eye" valve. This combination is very sensitive and small out of balance voltages are indicated by a blurring of the "X" shaped shadow of the "Magic-eye" valve. The variable resistance in series with the condenser is calibrated 0-50 and measures the Power Factor. On resistance ranges the internal resistance standard is switched into the bridge in place of the condenser and the Power Factor control.

MAINS ADJUSTMENT

A 3 pin plug should be fitted to suit the sockets available.

Red — Line.
Black — Neutral.
Green — Earth.

If a 2 pin plug is used the green wire is preferably connected to a separate earth.

The instrument is designed to operate from supplies of 105-125 volts or 200-250 volts, 40-100 cycles. The voltage adjustment panel will be found on the side of the instrument; the bakelite screw should be screwed firmly into the socket most nearly corresponding to the actual voltage, i.e. :—

For 105-125 volts use the 115V. socket.
For 200-224 volts use the 210V. socket.
For 225-250 volts use the 240V. socket.
The consumption is approximately 30 watts.

CONTROLS

There are four panel controls :—

(a) Capacity and Resistance. The central control on the circular scale controls the variable arm of the Bridge on all Capacity and Resistance measurements. The scale is calibrated from 0 to 12 in 120 steps.

(b) Mains On Off Switch. On right hand side.

(c) Range. The lower right-hand control selects either of eight Capacity or Resistance ranges. The value given on the dial corresponds to the maximum Capacity and Resistance reading on that range.

(d) Power Factor. The lower left-hand control indicates on all Capacity ranges the power factor of the condenser under test.

RESISTANCE	Max. Reading	Value per division
	12 ohms.	0·1 ohms.
	120 ohms.	1 ohm.
	1,200 ohms.	10 ohms.
	12,000 ohms.	100 ohms.
	120,000 ohms.	1,000 ohms.
	1·2 megohms.	10,000 ohms.
	12 megohms.	100,000 ohms.
	120 megohms.	1 megohms.

COMPARATOR RANGE

Set range switch to EXT. STD. and connect standard resistor between termina marked X and C and resistor under test to terminals Y and C. When comparing condensers, this procedure must be reversed, standard condenser to terminal Y and C and condenser under test to terminals X and C. The percentage error against the standard resistor or condensor will be indicated on the inner scale up to +50% or down to −25%. It is not advisable to use this range to compare resistors over 50 meg. or under 50 ohms and condensers over 50 mfd. or under 50 pf.

ACCURACY. The following are the accuracies on the different ranges of the instrument.

	Indication	Accuracy
Resistance ranges	1 to 2·5	± 6% of actual indication.
	2.5 to 5	± 4% ,, ,,
	5 to 12	± 2% ,, ,,
Highest resistance range	1 to 2·5	± 9% ,, ,,
(120 megohms)	2·5 to 5	± 6% ,, ,,
	5 to 12	± 3% ,, ,,
Capacity ranges	1 to 2·5	± 7% ,, ,,
	2·5 to 5	± 5% ,, ,,
	5 to 12	± 3% ,, ,,
Lowest capacity range	1 to 2·5	± 10% ,, ,,
(·00012 uF)	2·5 to 5	± 7% ,, ,,
	5 to 12	± 4% ,, ,,

Accuracy on this range may be considerably improved by subtracting from the indication the self-capacitance of the instrument (usually about 3pF, measurable by careful balancing with condenser disconnected). When working on this range, it is essential to use the shortest possible connecting leads.

Power factor percentage indications are only approximate.

It should be appreciated, however, that when measuring high resistances or low capacities, care must be taken if the most accurate results of which the instrument is capable, are attained.

In particular, the leads from the sockets should be kept as short as possible, preferably not more than ⅔" in length; the instrument case should be properly earthed, and the operator should keep his body clear of the terminals.

Proper attention to these simple precautions will ensure the most accurate results.

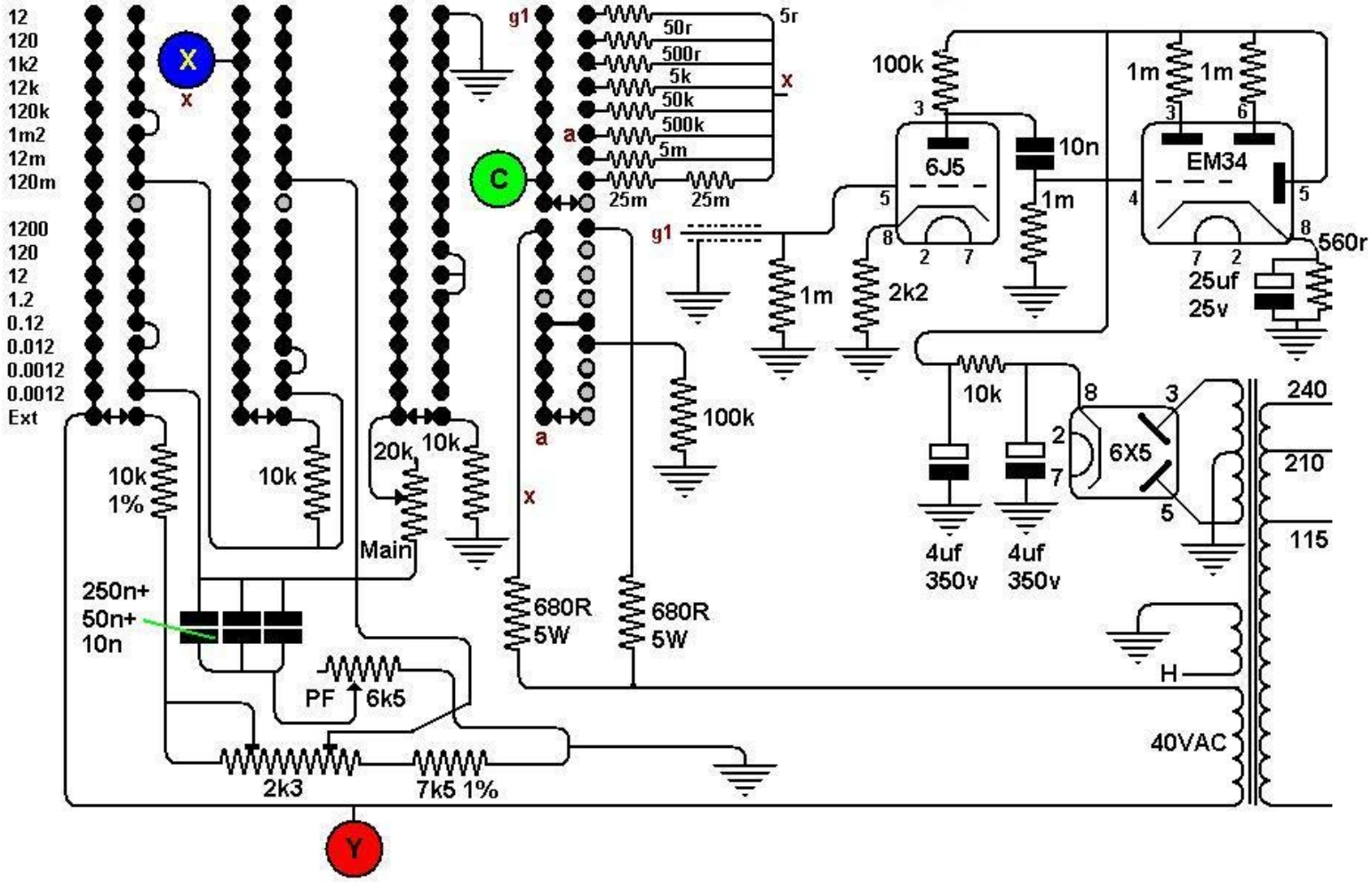

12
120
1k2
12k
120k
1m2
12m
120m
1200
120
12
1.2
0.12
0.012
0.0012
0.0012
Ext
X
x
g1
50r
500r
5k
50k
500k
5m
25m
25m
5r
x
a
C
100k
1m
1m
3
6
6J5
10n
EM34
5
4
5
8
2
7
1m
8
560r
g1
1m
2k2
7
2
25uf
25v
10k
8
3
240
2
6X5
210
7
5
115
4uf
350v
4uf
350v
10k
1%
10k
20k
10k
Main
a
100k
x
250n+
50n+
10n
680R
5W
680R
5W
PF
6k5
H
40VAC
2k3
7k5 1%
Y

Guarantee

Model. *Serial No.:* *Valid until:*

All Taylor instruments are subjected to a very thorough examination and final test, and leave our factory in good condition. Should you receive the instrument damaged please notify us and retain the instrument and *packing* for possible inspection by the carriers.

We guarantee all our instruments against faulty manufacture, and subject to the following terms we will repair, or, at our option, exchange free of charge any defective parts which fail in this instrument within SIX MONTHS from the date of registration. Certain proprietary articles such as Valves, Rectifiers, Cathode Ray Tubes, etc., are covered by separate manufacturers' guarantees and these items are subject to the conditions imposed by those suppliers.

THE GUARANTEE IS VALID PROVIDED:

(1) That the Registration Card has been correctly completed and returned to us within *seven days* of purchase.

(2) That the instrument has had, at all times, normal use and has not been tampered with, or modified.

(3) The guarantee will apply only if the instrument is bought from Taylor Electrical or an authorized supplier at the appropriate price and terms.

(4) That in cases of complaint the instrument is returned to us securely packed, carriage paid.

(5) That any faulty parts are returned to us for inspection (if required).

(6) In the event of repairs being carried out by the purchaser the Company cannot be held responsible for any expenses incurred. Confirmation should be obtained from us that the guarantee will not be affected should the user wish to correct a minor defect himself.

(7) Under no circumstances can the Company be held responsible for indirect damage caused by any defect, loss or damage in transit. Our liability in all cases is limited to making good any defective part of the instrument.

(8) This guarantee cannot be varied by any person or Company other than Taylor Electrical. In the event of any dispute arising as to the interpretation of this guarantee, the decision of the Company must be accepted as final.

GUARANTEE FOR VALVES AND CATHODE RAY TUBES

NOTE: Valves are guaranteed by the majority of manufacturers for a period of three months from the date of purchase and is only given in respect of faulty workmanship and/or material and does not cover misuse, consequential damage or breakage.

TAYLOR ELECTRICAL INSTRUMENTS LIMITED

419-424 MONTROSE AVENUE · SLOUGH · BUCKS · ENGLAND