obtained through the use of fiber-optic readout. Fiber-optic readout involves the use of plastic fibers of very small diameter, called light tubes, for transferring light from one place to another. The light tubes are designed so that the light incident at one end of the tube is transmitted through the tube to the other end. If the output end of the tube is viewed directly, the output light looks like a small dot. This transmission of light occurs even if the light tubes are bent at slight angles. In order to form a character, many light tubes are arranged so that their output ends, the dots of light, are in the configuration of the character to be formed. The input ends are then arranged so that they receive their incident light from the same light source. In some cases it may take two or more light sources to form one character. Whenever the proper light source (or sources) is illuminated, the desired character appears. It is the purpose of the readout circuitry, therefore, to light the readout lamps so the deflection factors they indicate correspond with the CRT display deflection factors determined by the positions of the VERTICAL and HORIZONTAL switches, the MODE switch, the DISPLAY OFFSET Selector switch, the AMPLITUDE switch and the .1X STEP MULT button.

The inputs for the readout logic come from logic lines whose logic levels are controlled by the switches shown on the Readout Switching and Interconnections schematic, or by externally provided logic levels. The form of the inputs is a high-low code. Normally all inputs are high and the code is determined by switching some of the logic lines to ground. Ground reference is generally provided directly as part of the switch. However, in the case of the vertical and horizontal switches, ground is provided through saturation transistors Q900 and Q943 respectively. If lows are applied to pins 7 and 20 of J363, these transistors are turned off. In this case ground reference for the affected logic lines must then be provided externally.

The readout logic (see Readout Logic schematic) primarily consists of integrated circuit decoders. These decoders receive inputs from the incoming logic lines in terms of the above-mentioned switch code. This input code is then translated into a high-low lamp code which appears on the output logic lines. Each of the output logic lines is connected to a readout lamp (see Readout Lamps schematics) and each lamp illuminates one character of one part of a character. A low on a readout lamp causes the lamp to light. The intensity of the readout is determined by the 0 to 4.5 volt supply.

The readout logic circuitry also generates a lamp code which produces a readout of beta or transconductance (g_m) per division. This β or g_m readout lamp code is obtained by dividing the vertical lamp code by the steps lamp code.

The decoders which control the horizontal deflection factor readout are U951 and U953. Inputs to these decoders are controlled by the HORIZONTAL switch, the DISPLAY OFFSET Selector switch or by externally applied inputs to J363. Outputs from these decoders go to the horizontal readout lamps. As an example of how a lamp code is generated, assume that the HORIZONTAL switch is set to .5 V COLLECTOR and the DISPLAY OFFSET Selector switch is set to NORM (OFF). Due to the closing of contacts by the HORIZONTAL cam switch (see the Readout Switching and Interconnections schematic), lows are applied to the inputs to U951 and U953 at connectors 13, T, and S of P950 (see Fig. 3-13). The other inputs to the horizontal decoders are held high. The output lamp code resulting from this input code is lows at lamp input connectors F, I, J, L, A, C, D and E. The resulting PER HORIZ DIV readout is 500 mV, which corresponds with the .5 V COLLECTOR position of the HORIZONTAL switch.

Decoders U956 and U960 control the vertical deflection factor readout. Inputs to these decoders are controlled by the VERTICAL switch, the DISPLAY OFFSET Selector switch, the MODE switch and externally applied inputs to J363. Outputs from these decoders go to the vertical readout lamps. The horizontal and vertical decoders are affected by these logic inputs, at pin U, pin Y and pin 12 of J363, whose logic levels may only be determined externally.

Decoders U965 and U970 control the step amplitude readout. Inputs to U965 and U970 are controlled by the AMPLITUDE switch, the STEP MULT .1X button and externally applied inputs to J361. Outputs from U965 and U970 go to the steps readout lamps.

The beta or g_m generator consists of U974, U975 and U976. The input code received by these decoders is a combination of logic levels coming in part from the vertical lamp code, and in part from the steps lamp code. The outputs from these decoders go to the beta readout lamps. Q960 and Q974 decode the logic levels appearing at pins 13 and 15 of U960 and pins 13 and 15 of U970. Q977 and Q979 provide a means of lighting the 1,4 lamp (connector BI) whenever the 2,5 lamp (connector AR) is off.

Power Supply

The Type 576 can be operated either from a 115-volt or a 230-volt line voltage source. The low voltage power supply (see Fig. 3-14) consists of a single transformer, T701, which has nine secondaries. This supply provides six regulated voltages: −75 volts, −12.5 volts, +5 volts, +12.5 volts, +15 volts and +100 volts. It also produces a regulated variable voltage of 0 to 4.5 volts, one unregulated voltage of +50 volts and an AC voltage to drive the POWER ON light and the GRATICULE ILLUM lights. The windings providing a source of clock pulses for the step generator and the CRT heater are among the nine secondaries of T701. All the regulated power supplies are completely short proof.

Input Circuit. When the POWER switch is switched to ON, line current flows from the input, P701 (see Power Supply schematic), through power switch SW701, fuse F701, Thermal Cutout TK701 and into the primary wind-

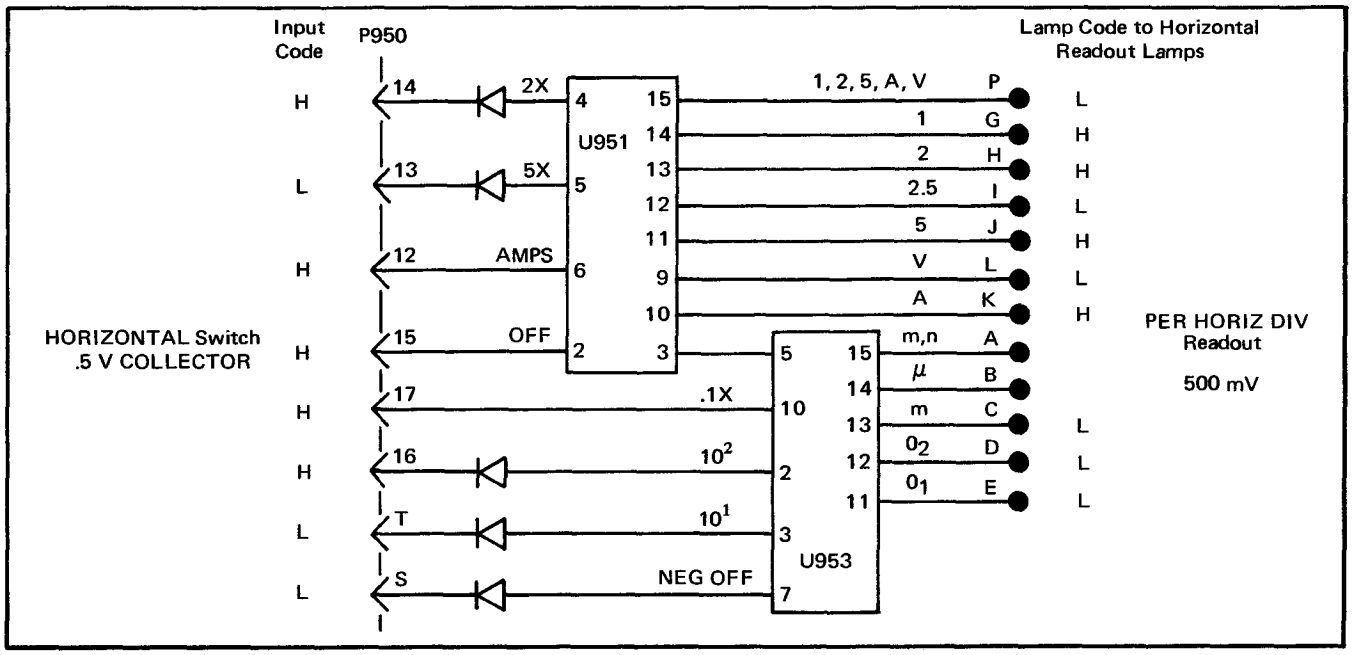

Fig. 3-13. Example of operation of Horizontal Readout decoders.

ings. For 115-volt operation the LINE SELECTOR switch connects the two primaries in parallel and for 230-volt operation connects them in series. For 230-volt operation, F703 is connected into the circuit. The RANGE SELECTOR plug determines how many turns of each primary winding are utilized to compensate for variations in line voltage.

−75-volt Supply. The −75-volt supply consists of diode bridge D706 A, B, C and D, filter capacitors C706 and C707, comparator Q716A and B, emitter follower Q729, short protection Q725 and Q727, and series regulator Q734.

9-volt Zener diode D708 sets the base voltage of comparator transistor Q716A while the quiescent voltage at the base of Q716B is set by −75 V adjustment R721. Any variation in the −75-volt supply voltage is compared by Q716A and B. The resulting rise or fall in voltage across R715 is transmitted by Q729 to the base of series regulator Q734. Any change in voltage of the −75-volt supply will be opposed by a change in current through the series regulator.

The output current of the −75 volt supply is limited to a value less than normal whenever the supply is shorted to a voltage between −75 V and chassis ground. The supply current of the −75 volt supply is controlled by the voltage across R735, which is dependent on the base voltage of Q734. This voltage is in turn dependent on the voltage across R730 and R731. As the −75 volt supply becomes more positive (due to shorting it to a more positive supply), the voltage at the base of Q734 is raised, causing more supply current to be conducted through R735. As the supply voltage becomes more positive, the voltage at the junction of R730 and R731 rises high enough to turn on Q727. When Q727 turns on, it begins pulling down on the base voltage of Q729 and down on the base voltage of Q734, thus limiting the supply current. The output current of the −75-volt supply comes less, the closer the supply voltage is to ground.

D732 prevents the supply from going more than 0.6 volt above chassis ground if the −75 volt supply is shorted to a positive voltage. D722 protects the −12.5 volt supply if it is shorted to the −75 volt supply. If the −12.5 volt supply is pulled negative, D722 turns on when the supply is about at −15 volts which disables comparator Q716A and B. The −75 volt supply then limits current until both supplies are at about −2.5 volts. If the +12.5 volt supply is shorted to the +100 volt supply, Q725 turns on. When Q725 is on, it limits current through R735 in the same manner as discussed previously for Q727. The result of shorting the +12.5 volt supply to a more positive voltage is to turn off the −75 volts supply. Since the −75 volt supply is the reference for the −12.5 volt, +12.5 volt, +100 volt, and CRT voltage supplies, when the −75 volt supply is turned off, the other power supplies are turned off.

−12.5-volt Supply. The −12.5 volt supply consists of diode bridge D737A, B, C and D, filter capacitor C738, comparator Q744A and B, emitter follower Q750, short protection Q748 and series regulator Q756. This circuit regulates the −12.5-volt supply in essentially the same manner as the −75-volt supply operates.

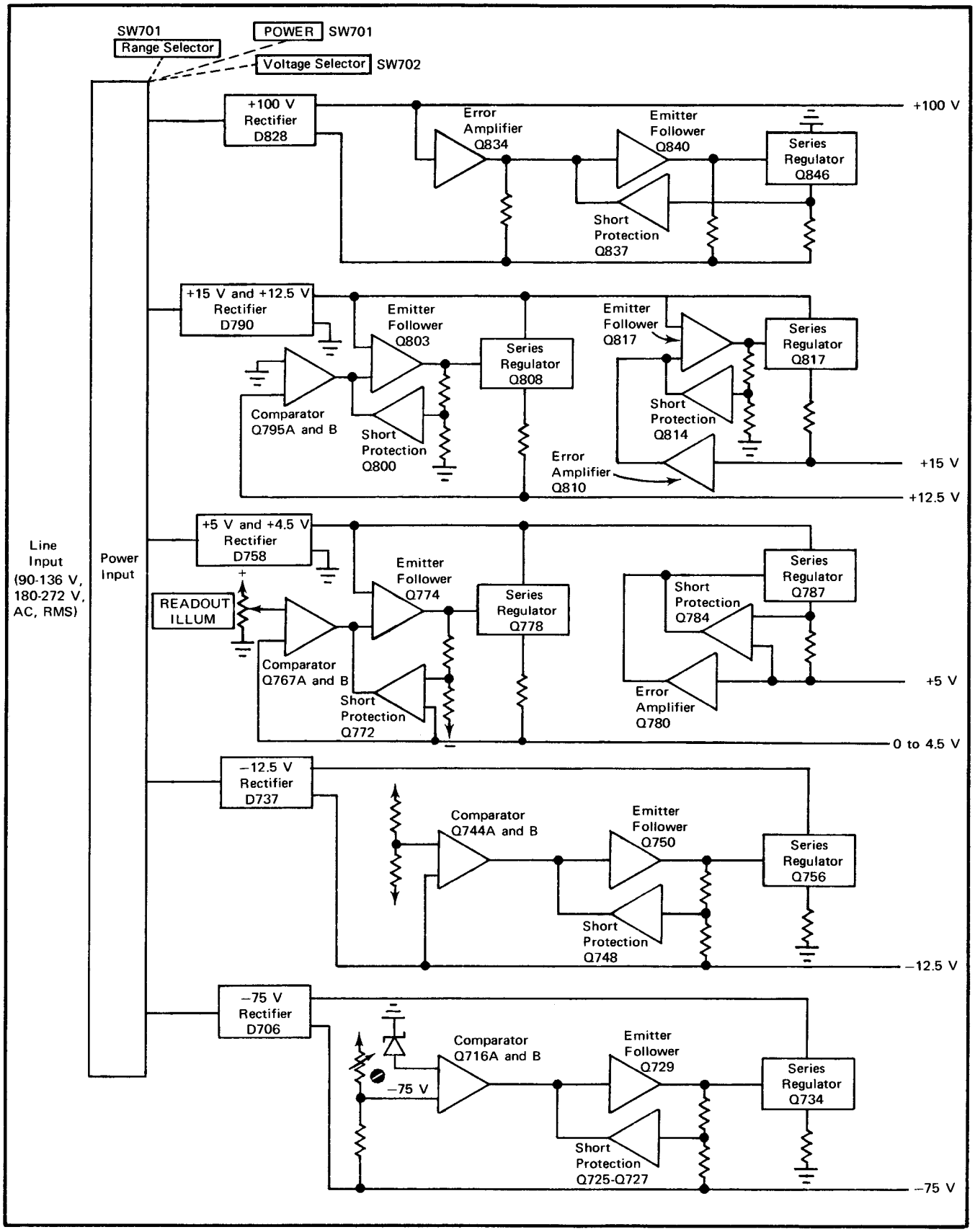

Fig. 3-14. Block diagram of L. V. Power Supply.

0 to +4.5-volt Variable Supply. The 0 to +4.5-volt variable supply consists of diode bridge D758A, B, C and D, filter capacitor C759, comparator Q767A and B, emitter follower Q774, short protection Q772 and series regulator Q778. This circuit operates in essentially the same manner as the −75-volt supply circuit. In this circuit, however, the reference voltage at the base of Q767A is variable from 0 volts to +4.5 volts by the READOUT ILLUM control, R760, and divider R762 and R763. The output current of the supply is limited by Q772.

+5-volt Supply. The +5-volt supply consists of error amplifier Q780, short protection Q784 and series regulator Q787. The supply shares diode bridge D758A, B, C and D and filter capacitors C758 and C759 with the +4.5-volt supply. Any variation in the +5-volt supply voltage is amplified by Q780, causing the base voltage of Q787 to vary in opposition to the variation of the supply. The current conducted through R788 by the supply is thus regulated, which in turn regulates the +5-volt supply. Q784 provides short protection by turning on whenever the current through R788 becomes excessive. When Q784 turns on, the base voltage of Q787 is pulled down, limiting the current through R788.

+12.5-volt Supply. The +12.5-volt supply consists of diode bridge D790A, B, C and D, filter capacitor C791, comparator Q795A and B, emitter follower Q803, short protection Q800, and series regulator Q808. This circuit operates in essentially the same manner as the −75-volt supply. Short protection of the +12.5-volt supply when it is shorted to a more positive voltage is provided by Q725 of the −75-volt supply. If the +12.5-volt supply voltage is pulled up, the base of Q725 is also pulled up, turning on Q725. With Q725 turned on, the base of Q729 is pulled down turning off the −75-volt supply, which will turn off the +12.5-volt supply.

+15-volt Supply, Camera Power. The +15-volt supply consists of error amplifier Q810, emitter follower Q817, short protection Q814 and series regulator Q819. The supply shares diode bridge D790 and filter capacitors C790 and C791 with the +12.5-volt supply. Any variation in the +15-volt supply voltage is amplified by Q810, causing an opposing variation in the voltage at the base of Q817. This opposing voltage variation is transmitted through the emitter of Q817 to the base of series regulator Q819 where it controls the current conducted by R819 and thus regulates the supply. When enough current is conducted by Q819 to turn on Q814, the voltage at the base of Q817 is pulled down, thus limiting the current through Q819.

+50-volt Supply. The +50-volt supply consists of diode bridge D821A, B, C and D, and filter capacitors C822 and C823. It is a floating unregulated supply used to power the step amplifier output.

+100-volt Supply. The +100-volt supply consists of diode bridge D828A, B, C and D, filter capacitor C829, error amplifier Q834, emitter follower Q840, short protection Q837 and series regulator Q846. Any variation in voltage by the +100-volt supply is amplified by Q834 and transmitted through Q840 to the base of Q846. Since any variation in the supply is inverted by Q834, the base voltage of Q846 will always move in opposition to a variation of the supply. The current conducted by R846, therefore, also is conducted so as to oppose any change in supply voltage. When enough current is conducted by Q846 to turn on Q837, the voltage at the base of Q840 is pulled down, thus limiting the current conducted by Q819.

CRT Voltage Supply

The CRT power supply produces two high voltages, −4 kV and +225 volts, for operation of the CRT and its related controls. In addition, the +225-volt supply is used by the display amplifiers. The source of power for the two supplies is a high frequency (about 28 kHz) Hartley oscillator which consists of Q851 and the two primaries of transformer T850. The collector of Q851 is connected through the collector primary, R850 and L850 to the +100-volt supply. When current flows through the collector primary, a magnetic field is built up in the transformer core. Due to this field, a reverse base current is caused to be conducted through Q851 by the base primary and Q851 is eventually turned off. With Q851 off, no current flows through the collector primary. The residual field in the transformer core now causes forward base current to be conducted through Q851, turning it on. As Q851 turns on, current again flows through the collector primary, thus beginning a new cycle. The frequency of the oscillator and thus the output current of the secondaries is controlled by the voltage on pin 2 of the base primary.

−4 kilovolt Supply. The −4 kV supply consists of half-wave rectifier D870, filter capacitors C870 and C871, and divider resistors R875 through R883. This supply is a half-wave rectified supply with D870 forward biasing on negative transistions of the voltage on the −4 kV secondary. The −4 kV supply voltage after being filtered by C870 and C871 is reduced by Zener diode D882 to provide the −3890 volt cathode voltage. The grid voltage is controlled by the divider made up of R882 and INTENSITY control R883. The voltage on the focus screen of the CRT is controlled by FOCUS control R880.

The −4 kV supply is regulated from a reference supply which is generated by the winding between terminals 6 and 5 of T850. This reference supply consists of half-wave rectifier D866 and D869, and filter capacitor C866. The regulator circuit consists of error amplifier Q859 and emitter follower Q855. Any variation in the reference supply voltage is transmitted to the base of Q859 through divider R860-R864. The variation is then amplified and inverted by Q859 and transmitted through Q855 to the base of Q851, where it regulates the drive of the oscillator. Any variation in current conducted by the −4 kV supply is conducted by R899, which causes the decoupled supply voltage at the emitter of Q859 to vary, thus compensating for current variation in the −4 kV supply.

The voltage on the display geometry screen is controlled by GEOMETRY adjustment R893. The voltage on the display astigmatism screen is controlled by ASTIGMATISM adjustment R891. Current for the trace rotation controlling coil is controlled by TRACE ROTATION adjustment R897.

+225-volt Supply. The +225-volt supply is generated from the same transformer winding as the −4 kV reference supply. It consists of half-wave rectifier D868 and D865, filter capacitors C869, C868 and Q868. Regulation of the +225-volt supply is supplied by the reference supply through divider R860 through R864, and through emitter followers Q866 and Q868.

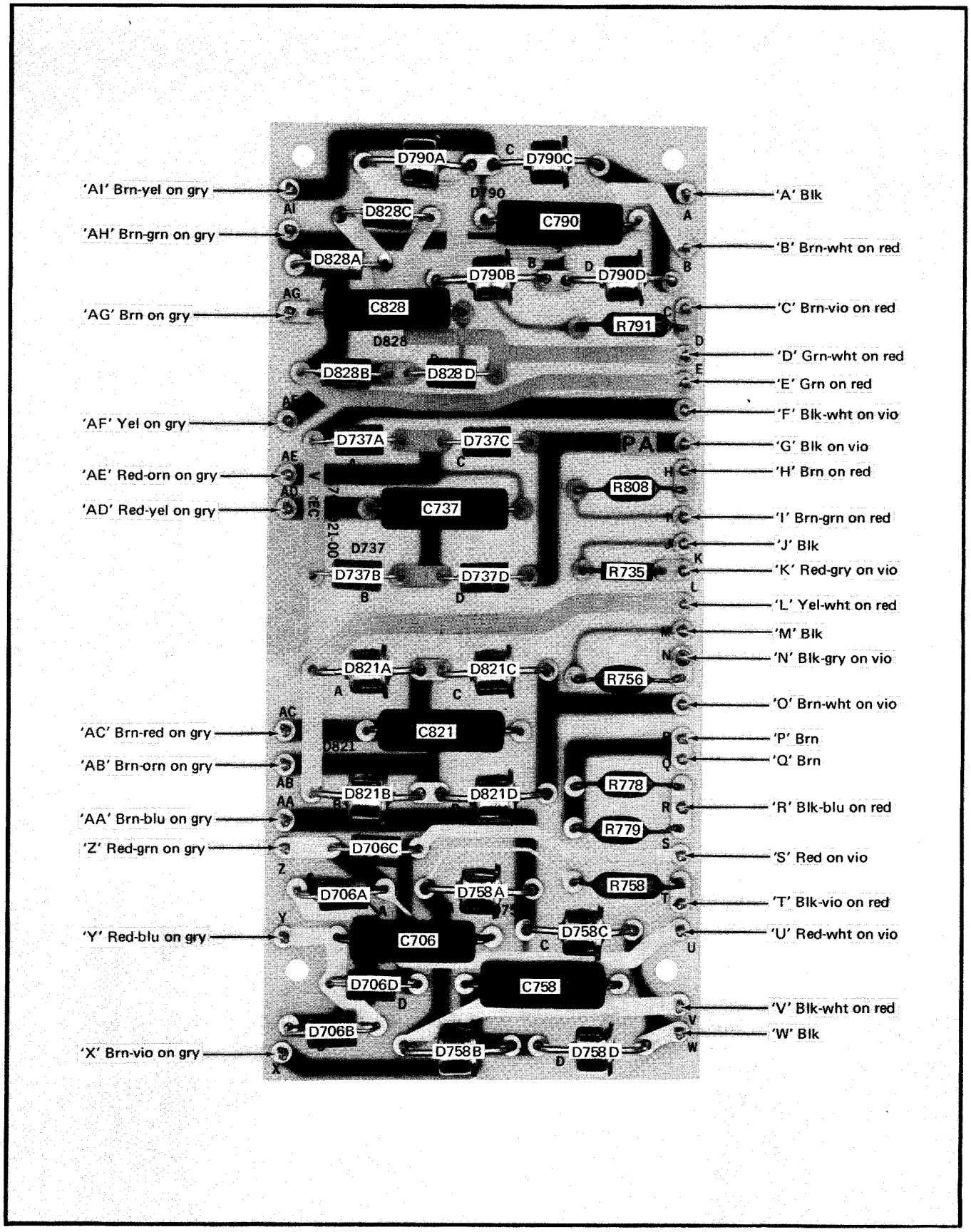

Fig. 4-23. Component locations and wiring color codes on L. V. Rectifiers circuit board.

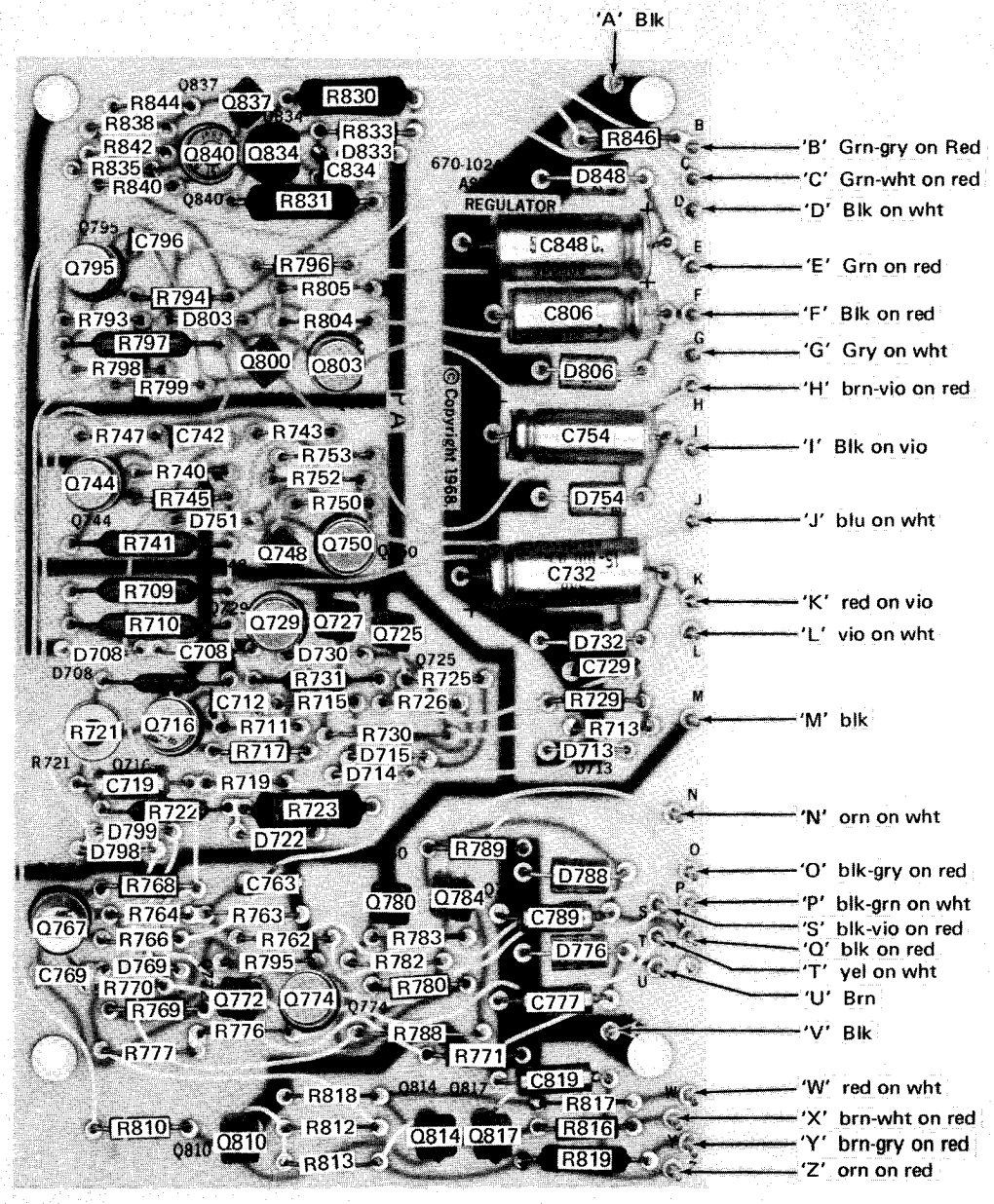

Fig. 4-24. Component locations and wiring color codes on L. V. Regulator circuit board.

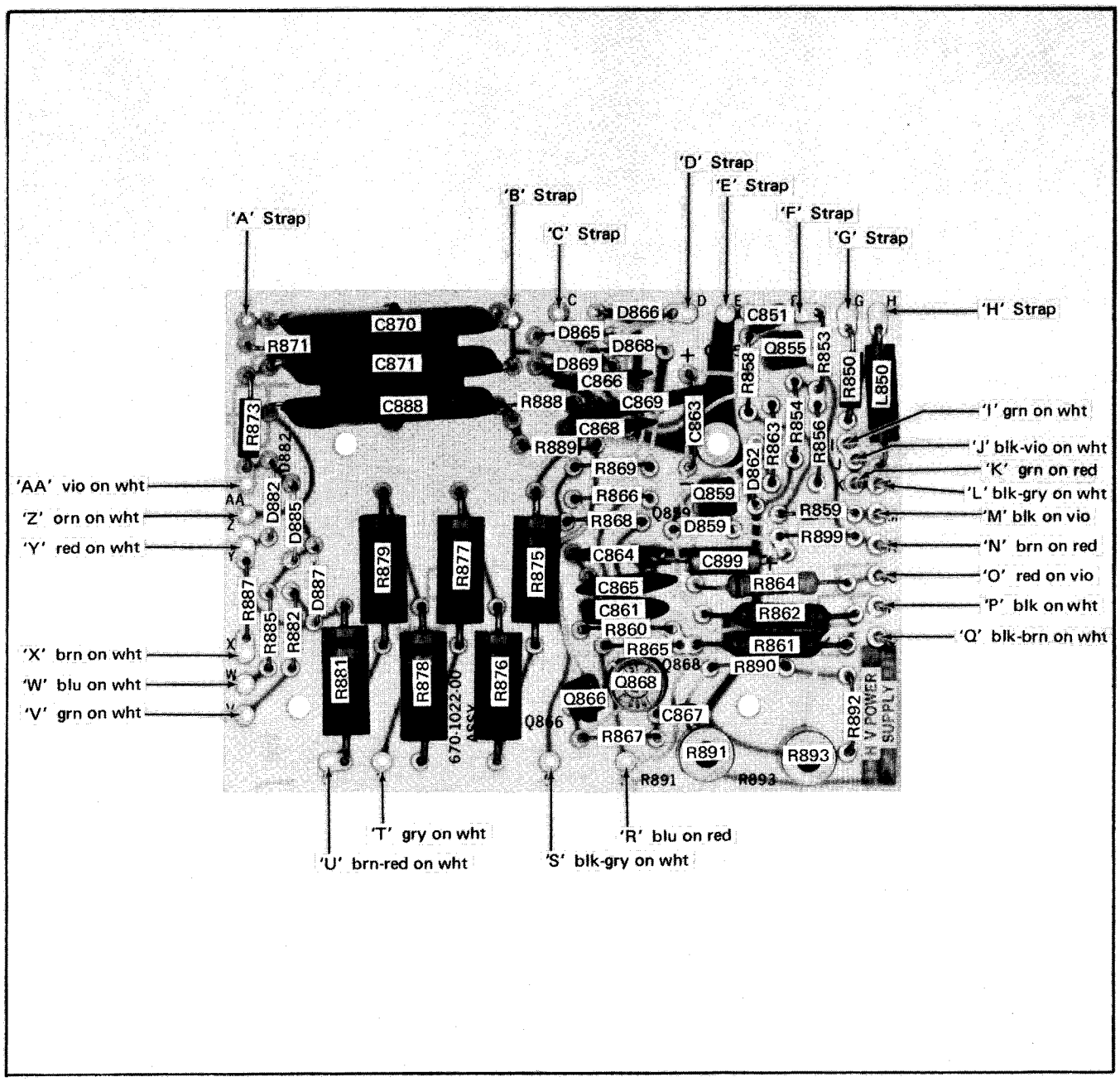

Fig. 4-26. Component locations and wiring color codes on H. V. Power Supply circuit board.

NOTES

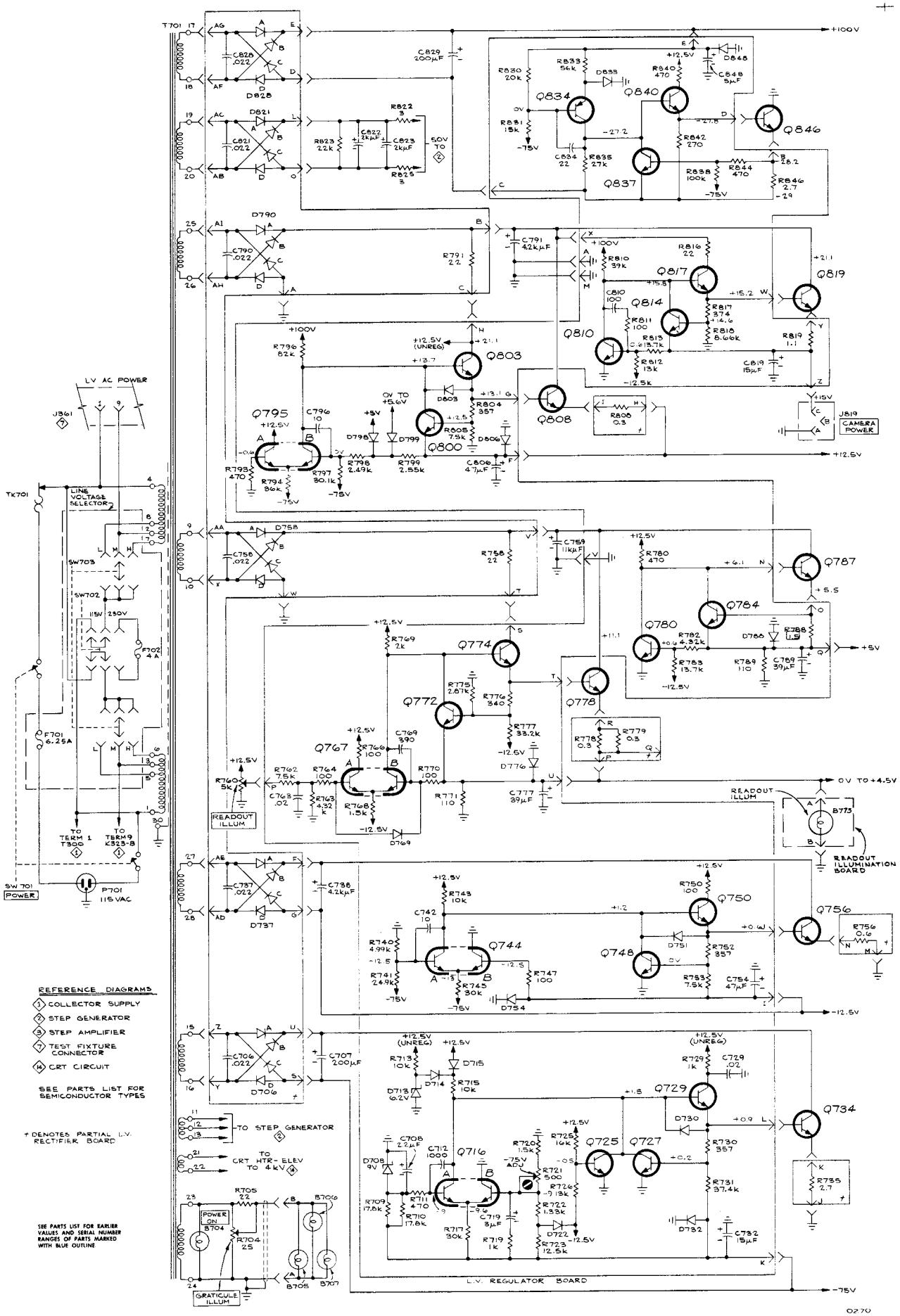

REFERENCE DIAGRAMS

1. COLLECTOR SUPPLY
2. STEP GENERATOR
3. STEP AMPLIFIER
7. TEST FIXTURE CONNECTOR
M. CRT CIRCUIT

SEE PARTS LIST FOR SEMICONDUCTOR TYPES

+ DENOTES PARTIAL L.V. RECTIFIER BOARD

SEE PARTS LIST FOR EARLIER VALUES AND SERIAL NUMBER RANGES OF PARTS MARKED WITH BLUE OUTLINE

VOLTAGES obtained under conditions given on Diagram 1

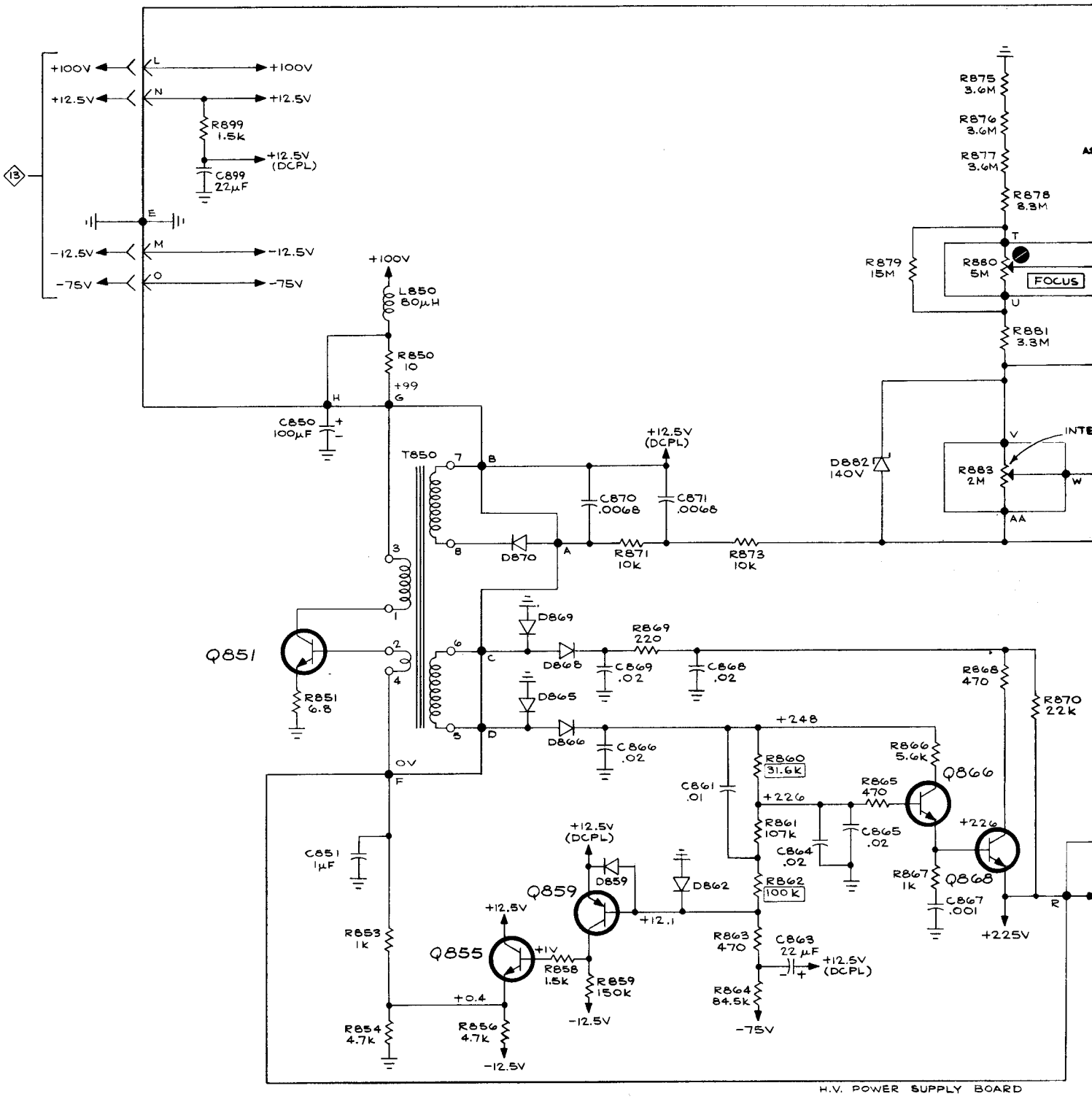

H.V. POWER SUPPLY BOARD

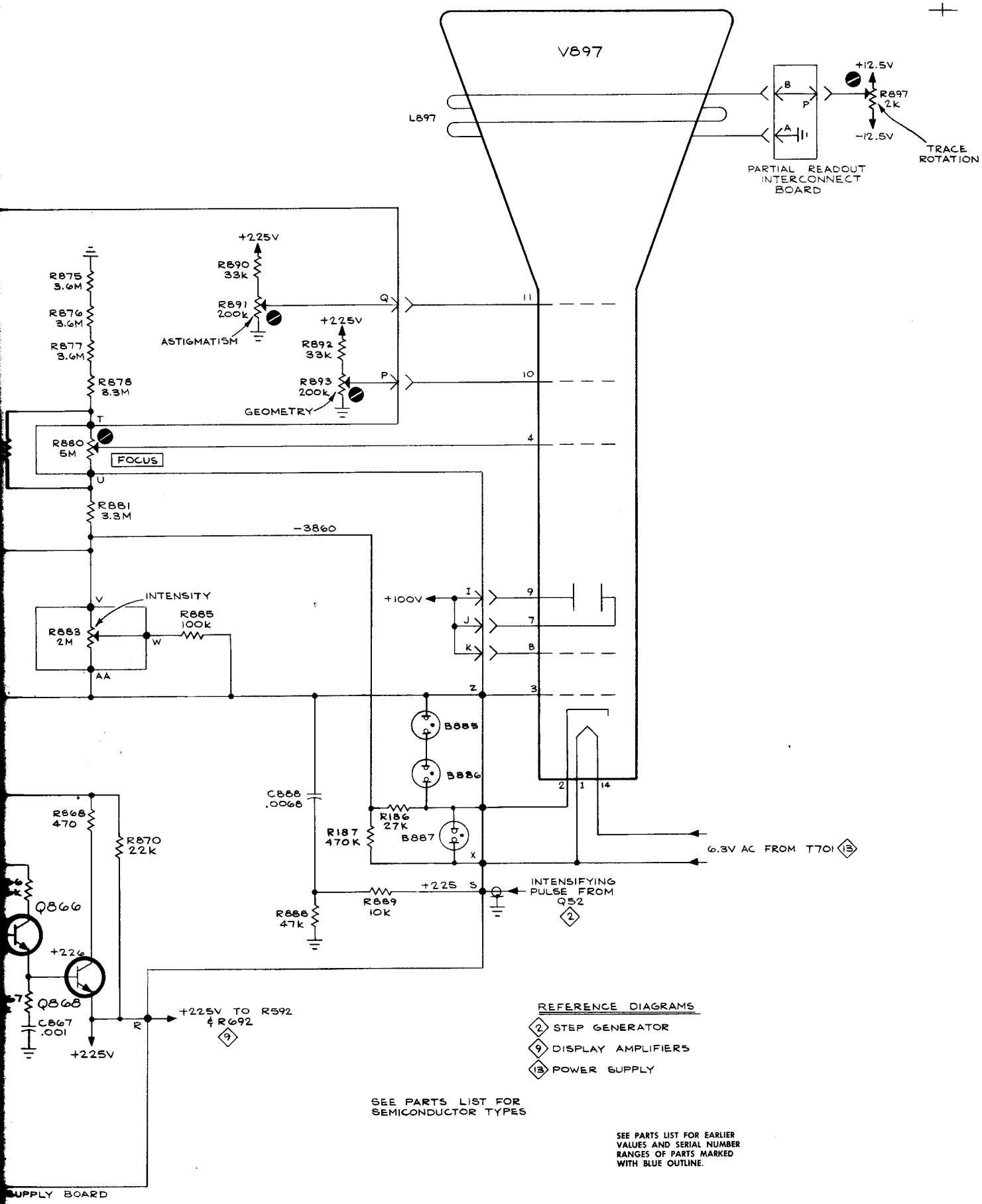

REFERENCE DIAGRAMS

2 STEP GENERATOR

9 DISPLAY AMPLIFIERS

13 POWER SUPPLY

SEE PARTS LIST FOR SEMICONDUCTOR TYPES

SEE PARTS LIST FOR EARLIER VALUES AND SERIAL NUMBER RANGES OF PARTS MARKED WITH BLUE OUTLINE.

VOLTAGES obtained under conditions given on Diagram 1.

1269

CRT CIRCUIT 14

B

CRT CIRCUIT 14