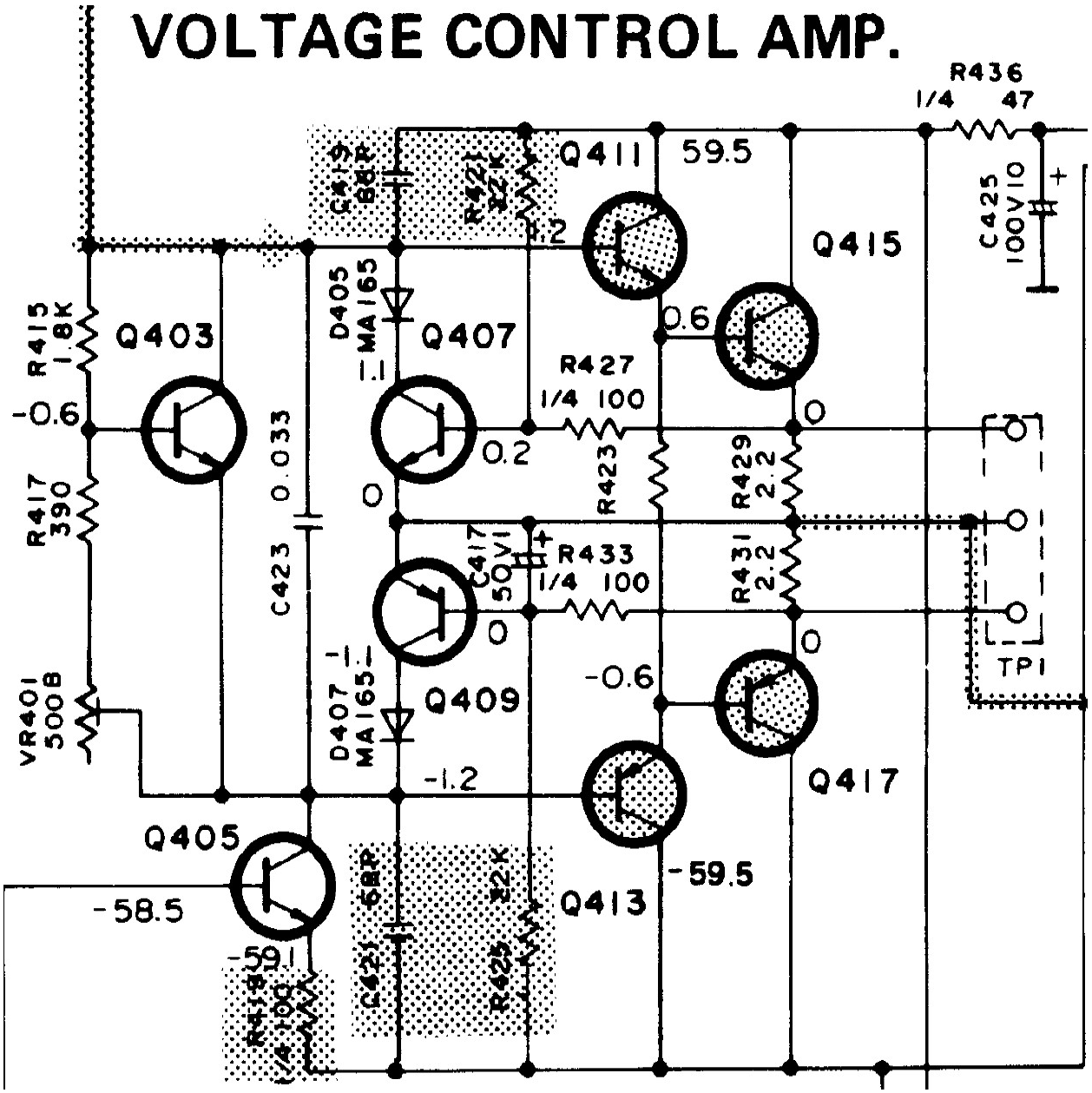VOLTAGE CONTROL AMP.