MOTOROLA
SEMICONDUCTORS
P.O. BOX 20912 • PHOENIX, ARIZONA 85036

MC3446A

QUAD GENERAL-PURPOSE INTERFACE BUS (GPIB) TRANSCEIVER

The MC3446A is a quad bus transceiver intended for usage in instruments and programmable calculators equipped for interconnection into complete measurement systems. This transceiver allows the bidirectional flow of digital data and commands between the various instruments. The transceiver provides four open-collector drivers and four receivers featuring hysteresis.

- Tailored to Meet the IEEE Standard 488-1978 (Digital Interface for Programmable Instrumentation) and the Proposed IEC Standard on Instrument Interface
- Provides Electrical Compatibility with General-Purpose Interface Bus (GPIB)
- MOS Compatible with High Impedance Inputs
- Driver Output Guaranteed Off During Power Up/Power Down
- Low Power — Average Power Supply Current = 12 mA
- Terminations Provided

QUAD INTERFACE BUS TRANSCEIVER

SILICON MONOLITHIC INTEGRATED CIRCUIT

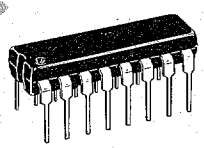

P SUFFIX
PLASTIC PACKAGE
CASE 648

TYPICAL MEASUREMENT SYSTEM APPLICATION

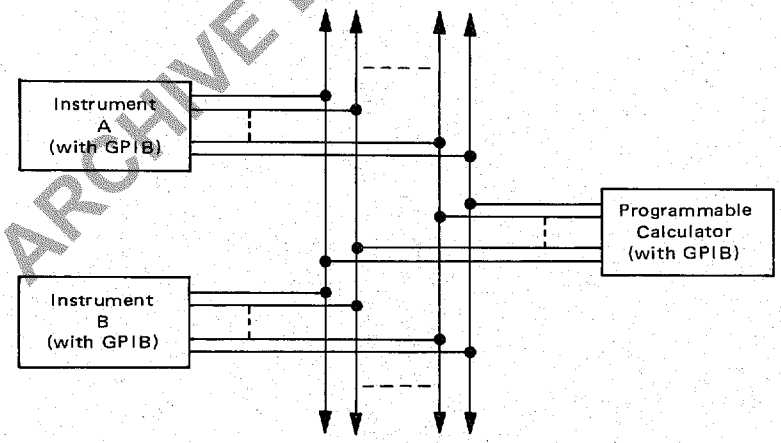

PIN CONNECTIONS

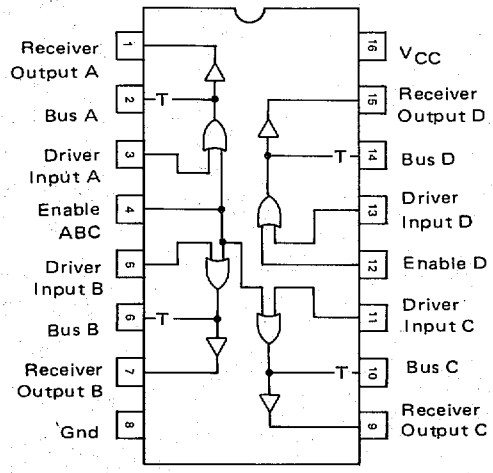

— T — = Bus Termination

ARCHIVE DOCUMENT - NOT FOR NEW DESIGN

©MOTOROLA INC., 1979

MAXIMUM RATINGS (T_A = 25°C unless otherwise noted.)

Rating	Symbol	Value	Unit
Power Supply Voltage	V_{CC}	7.0	Vdc
Input Voltage	V_I	5.5	Vdc
Driver Output Current	$I_{O(D)}$	150	mA
Junction Temperature	T_J	150	°C
Operating Ambient Temperature Range	T_A	0 to +70	°C
Storage Temperature Range	T_{stg}	-65 to +150	°C

ELECTRICAL CHARACTERISTICS

(Unless otherwise noted, 4.5 V ≤ V_{CC} ≤ 5.5 V and 0 ≤ T_A ≤ 70°C, typical values are at T_A = 25°C, V_{CC} = 5.0 V)

Characteristic	Symbol	Min	Typ	Max	Unit
DRIVER PORTION					
Input Voltage — High Logic State	$V_{IH(D)}$	2.0	—		V
Input Voltage — Low Logic State	$V_{IL(D)}$	—	—	0.8	V
Input Current — High Logic State (V_{IH} = 2.4 V)	$I_{IH(D)}$	—	5.0	40	μA
Input Current — Low Logic State (V_{IL} = 0.4 V, V_{CC} = 5.0 V, T_A = 25°C)	$I_{IL(D)}$	—	-0.2	-0.25	mA
Input Clamp Voltage (I_{IK} = -12 mA)	$V_{IK(D)}$	—	—	-1.5	V
Output Voltage — High Logic State (1) ($V_{IH(S)}$ = 2.4 V or $V_{IH(D)}$ = 2.0 V)	$V_{OH(D)}$	2.5	3.3	3.7	V
Output Voltage — Low Logic State ($V_{IL(S)}$ = 0.8 V, $V_{IL(D)}$ = 0.8 V, $I_{OL(D)}$ = 48 mA)	$V_{OL(D)}$	—	—	0.5	
Input Breakdown Current ($V_{I(D)}$ = 5.5 V)	$I_{IB(D)}$	—	—	1.0	mA
RECEIVER PORTION					
Input Hysteresis	—	400	625	—	mV
Input Threshold Voltage — Low to High Output Logic State	$V_{ILH(R)}$	—	1.66	2.0	V
Input Threshold Voltage — High to Low Output Logic State	$V_{IHL(R)}$	0.8	1.03	—	V
Output Voltage — High Logic State ($V_{IH(R)}$ = 2.0 V, $I_{OH(R)}$ = -400 μA)	$V_{OH(R)}$	2.4	—	—	V
Output Voltage — Low Logic State ($V_{IL(R)}$ = 0.8 V, $I_{OL(R)}$ = 8.0 mA)	$V_{OL(R)}$	—	—	0.5	V
Output Short-Circuit Current ($V_{IH(R)}$ = 2.0 V) (Only one output may be shorted at a time)	$I_{OS(R)}$	4.0	—	14	mA
BUS LOAD CHARACTERISTICS					
Bus Voltage ($V_{IH(E)}$ = 2.4 V)	$V_{(BUS)}$	2.5	3.3	3.7	V
(I_{BUS} = -12 mA)		—	—	-1.5	
Bus Current ($V_{IH(O)}$ = 2.4 V, V_{BUS} ≥ 5.0 V)	$I_{(BUS)}$	0.7	—	—	mA
($V_{IH(D)}$ = 2.4 V, V_{BUS} = 0.5 V)		-1.3	—	-3.2	
(V_{BUS} ≤ 5.5 V)		—	—	2.5	
(V_{CC} = 0, 0 V ≤ V_{BUS} ≤ 2.75 V)		—	—	0.04	
TOTAL DEVICE POWER CONSUMPTION					
Power Supply Current	I_{CC}				mA
(All Drivers OFF)		—	12	19	
(All Drivers ON)		—	32	40	

SWITCHING CHARACTERISTICS (V_{CC} = 5.0 V, T_A = 25°C)

Characteristic	Symbol	Min	Typ	Max	Unit
DRIVER PORTION					
Propagation Delay Time from Driver Input to Low Logic State Bus Output	$t_{PHL(D)}$	—	—	50	ns
Propagation Delay Time from Driver Input to High Logic State Bus Output	$t_{PLH(D)}$	—	—	40	ns
Propagation Delay Time from Enable Input to Low Logic State Bus Output	$t_{PHL(E)}$	—	—	50	ns
Propagation Delay Time from Enable Input to High Logic State Bus Output	$t_{PLH(E)}$	—	—	50	ns
RECEIVER PORTION					
Propagation Delay Time from Bus Input to High Logic State Receiver Output	$t_{PLH(R)}$	—	—	50	ns
Propagation Delay Time from Bus Input to Low Logic State Receiver Output	$t_{PHL(R)}$	—	—	40	ns

ARCHIVE DOCUMENT - NOT FOR NEW DESIGN

FIGURE 1 – TEST CIRCUIT AND WAVEFORMS FOR PROPAGATION DELAY TIME FROM RECEIVER INPUT (BUS) TO OUTPUT

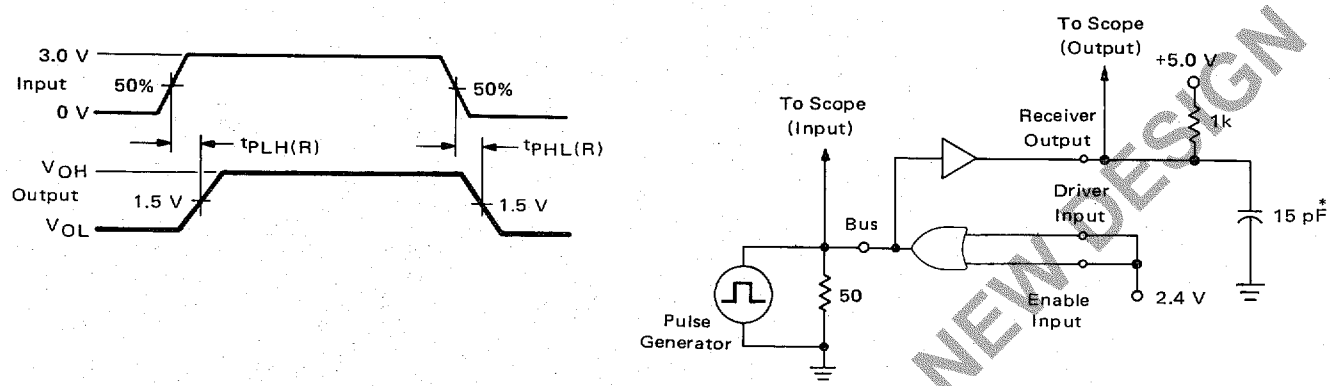

FIGURE 2 – TEST CIRCUIT AND WAVEFORMS FOR PROPAGATION DELAY TIME FROM DRIVER AND COMMON ENABLE INPUTS TO OUTPUT (BUS)

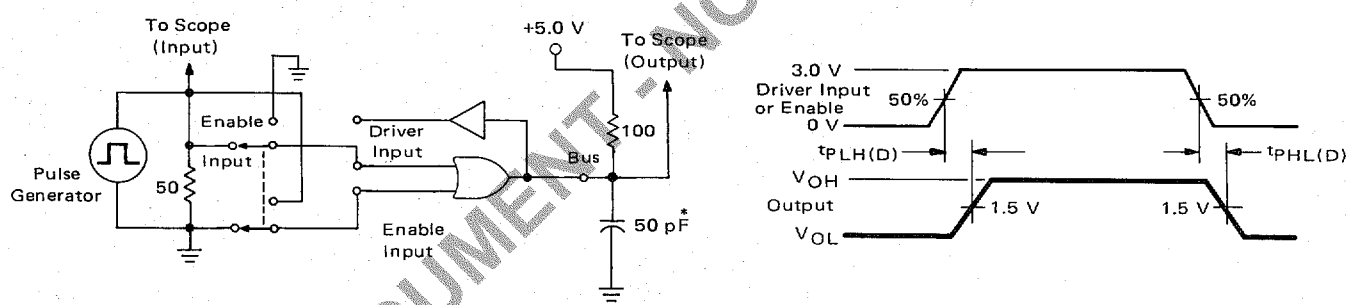

* Includes Probe and Jig Capacitance

FIGURE 3 – TYPICAL RECEIVER HYSTERESIS CHARACTERISTICS

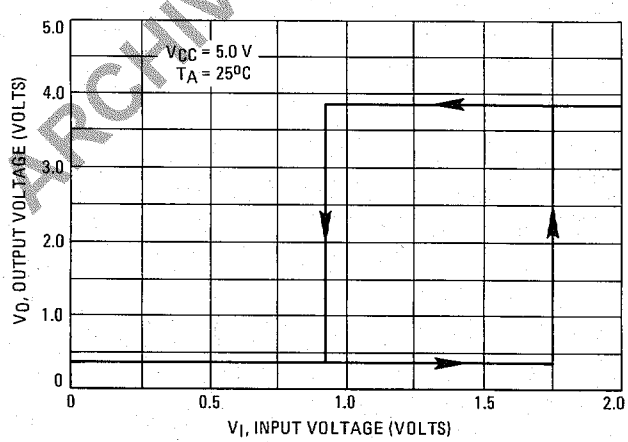

FIGURE 4 – TYPICAL BUS LOAD LINE

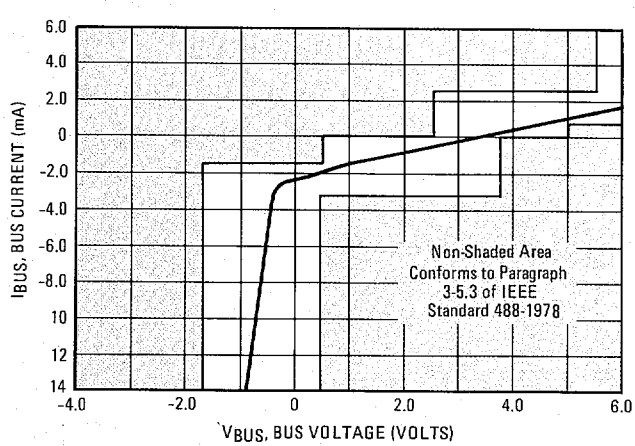

ARCHIVE DOCUMENT - NOT FOR NEW DESIGN

OUTLINE DIMENSIONS

P SUFFIX
PLASTIC PACKAGE
CASE 648-05

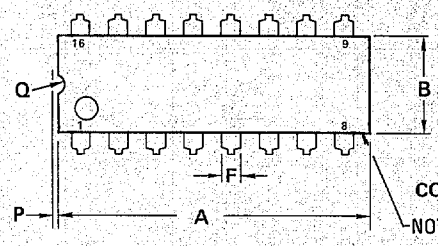

$R_{\theta JA}$ = 100°C/W (Typ)

OPTIONAL LEAD CONFIG. (1, 8, 9, & 16)

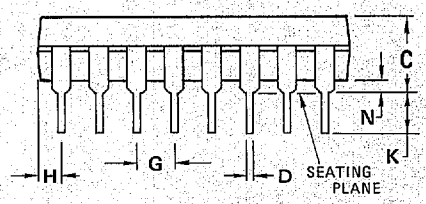

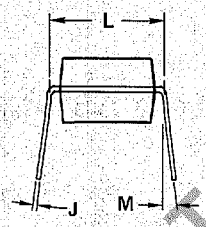

DIM	MILLIMETERS MIN	MILLIMETERS MAX	INCHES MIN	INCHES MAX
A	18.80	21.34	0.740	0.840
B	6.10	6.60	0.240	0.260
C	4.06	5.08	0.160	0.200
D	0.38	0.53	0.015	0.021
F	1.02	1.78	0.040	0.070
G	2.54 BSC		0.100 BSC	
H	0.38	2.41	0.015	0.095
J	0.20	0.38	0.008	0.015
K	2.92	3.43	0.115	0.135
L	7.62 BSC		0.300 BSC	
M	0°	10°	0°	10°
N	0.51	1.02	0.020	0.040

NOTES:
1. LEADS WITHIN 0.13 mm (0.005) RADIUS OF TRUE POSITION AT SEATING PLANE AT MAXIMUM MATERIAL CONDITION.
2. DIMENSION "L" TO CENTER OF LEADS WHEN FORMED PARALLEL.
3. DIMENSION "B" DOES NOT INCLUDE MOLD FLASH.
4. "F" DIMENSION IS FOR FULL LEADS. "HALF" LEADS ARE OPTIONAL AT LEAD POSITIONS 1, 8, 9, and 16).
5. ROUNDED CORNERS OPTIONAL.

ARCHIVE DOCUMENT - NOT FOR NEW DESIGN

THERMAL INFORMATION

The maximum power consumption an integrated circuit can tolerate at a given operating ambient temperature, can be found from the equation:

$$P_{D(T_A)} = \frac{T_{J(max)} - T_A}{R_{\theta JA}(Typ)}$$

Where: $P_{D(T_A)}$ = Power Dissipation allowable at a given operating ambient temperature. This must be greater than the sum of the products of the supply voltages and supply currents at the worst case operating condition.

$T_{J(max)}$ = Maximum Operating Junction Temperature as listed in the Maximum Ratings Section

T_A = Maximum Desired Operating Ambient Temperature

$R_{\theta JA}(Typ)$ = Typical Thermal Resistance Junction to Ambient

Motorola reserves the right to make changes to any products herein to improve reliability, function or design. Motorola does not assume any liability arising out of the application or use of any product or circuit described herein; neither does it convey any license under its patent rights nor the rights of others.

MOTOROLA Semiconductor Products Inc.

BOX 20912 • PHOENIX, ARIZONA 85036 • A SUBSIDIARY OF MOTOROLA INC.