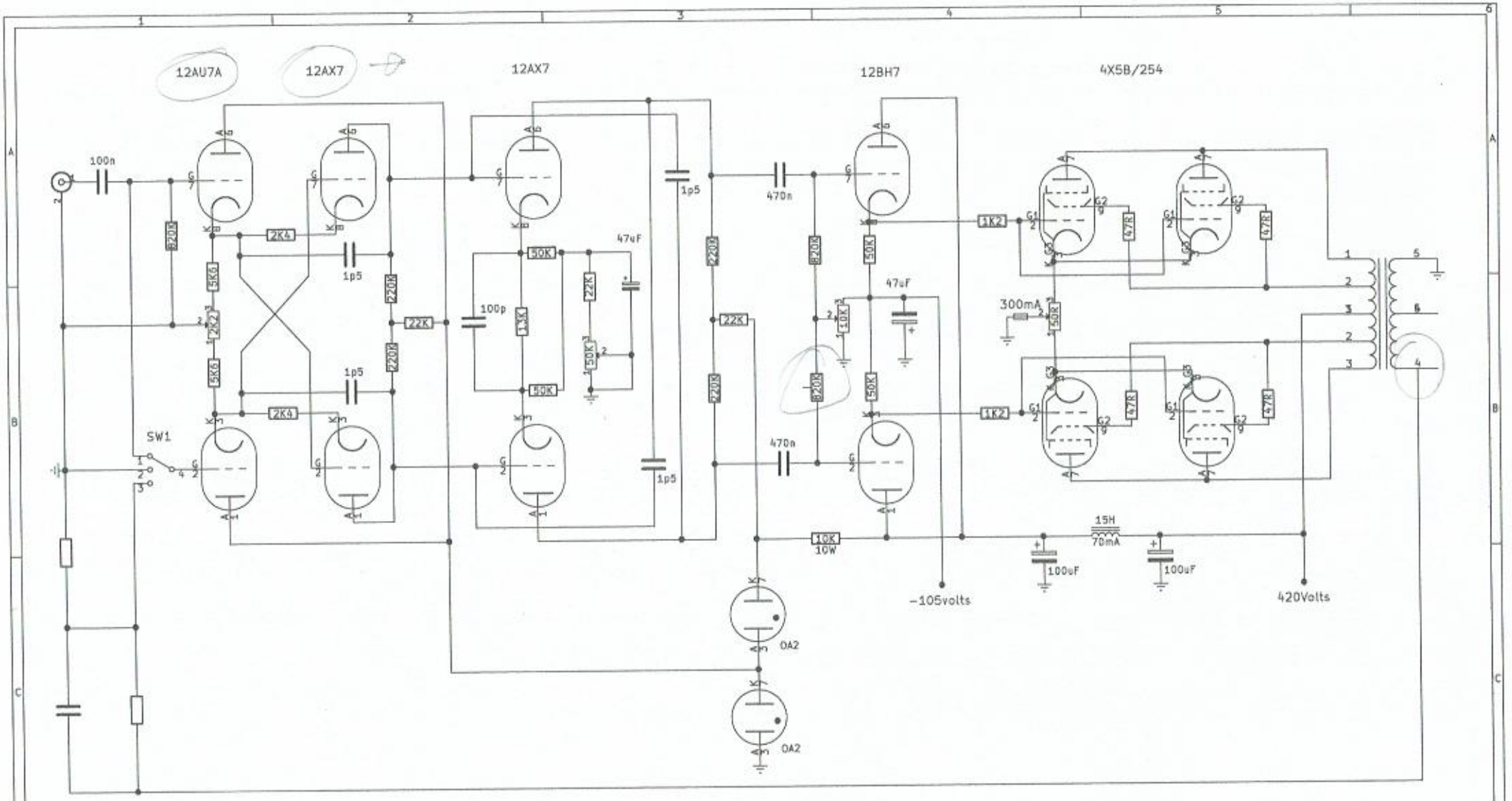

SW1 Positions

1=BALANCE
2=NEUTRALISE
3=OPERATE

Bespoke Audio		
Sheet: /		
File: Golden Ear Amplifier.sch		
Title: Golden Ear Laboratory Amplifier		
Size: A4	Date: 09/02/2018	**Rev: 2**
KiCad E.D.A. kicad 4.0.7-e2-637658ubuntu16.04.1		Id: 1/1