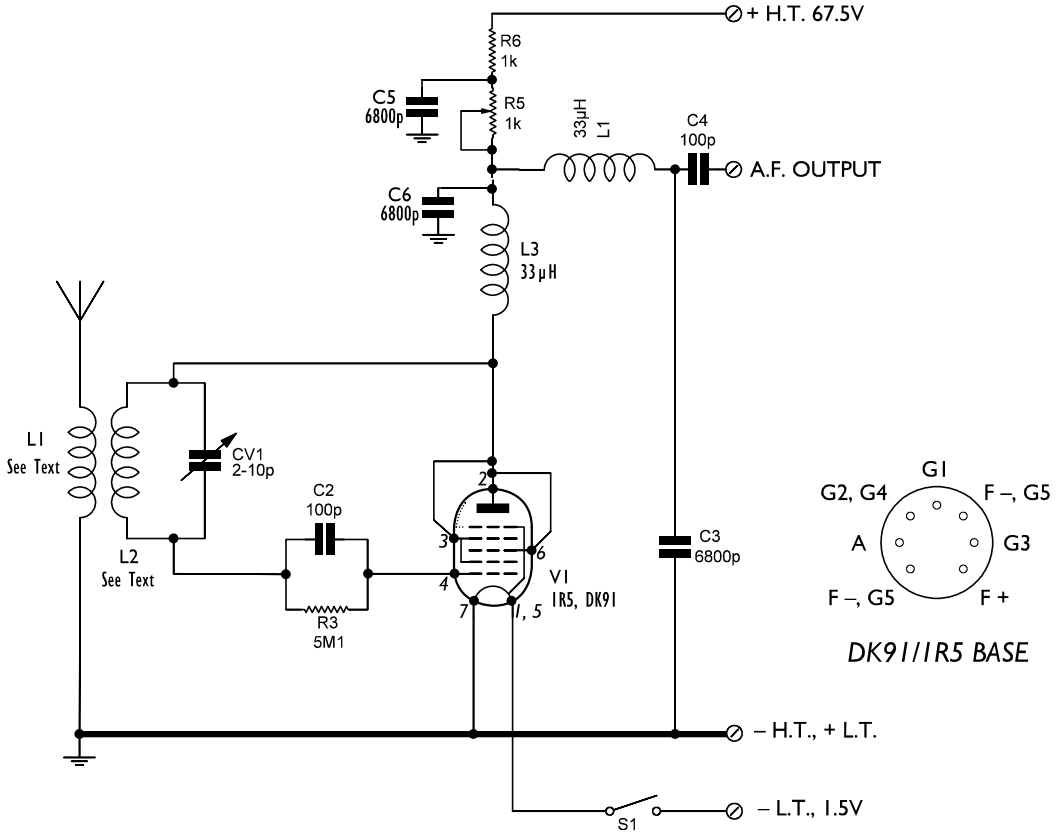

CHINESE 1 VALVE SUPER-REGEN RADIO KIT CIRCUIT DIAGRAM

Date	Name	Description	Page
11-6-2018	C. Williams	CHINESE 1 VALVE SUPER-REGEN RADIO KIT CIRCUIT DIAGRAM	
		Schematic no. CW5110618	of