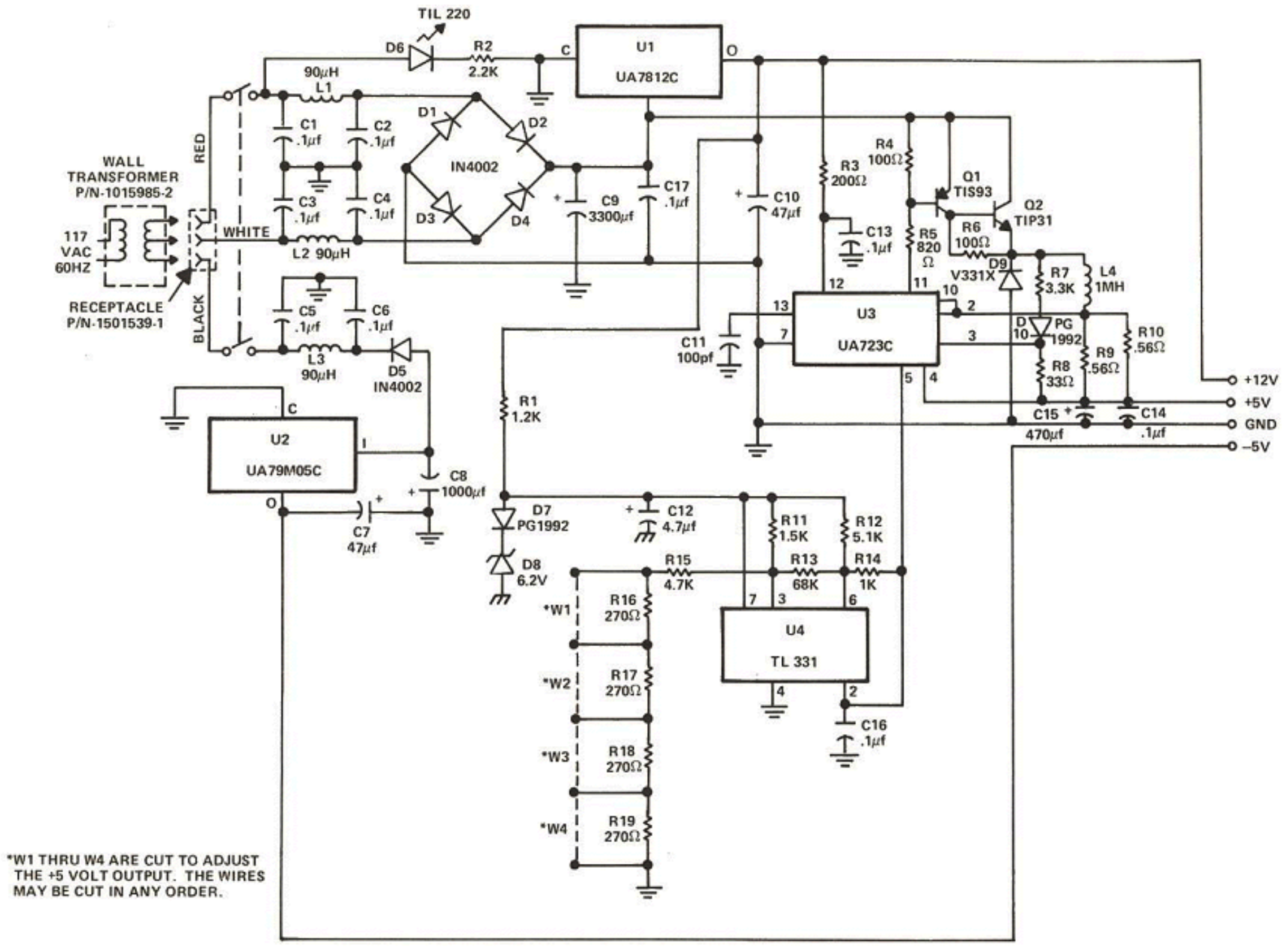

*W1 THRU W4 ARE CUT TO ADJUST THE +5 VOLT OUTPUT. THE WIRES MAY BE CUT IN ANY ORDER.

FIGURE G. TI-99/4A CONSOLE POWER SUPPLY