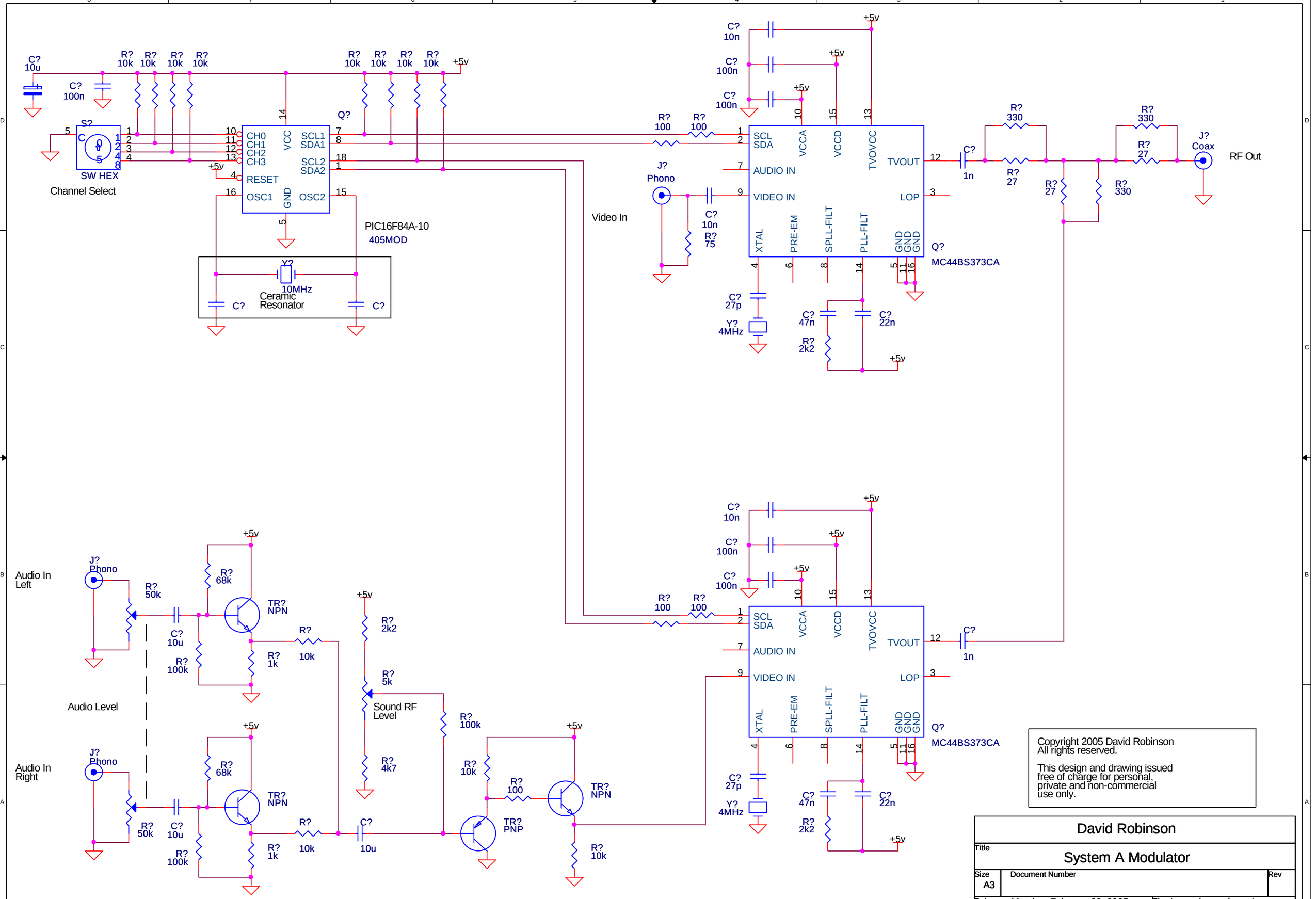
C? 10u
C? 100n
R? 10k
R? 10k
R? 10k
R? 10k
+5v
S?
SW HEX
Channel Select
Q?
CH0
CH1
CH2
CH3
RESET
OSC1
VCC
GND
SCL1
SDA1
SCL2
SDA2
OSC2
PIC16F84A-10
405MOD
Y?
10MHz
Ceramic Resonator
C?
R? 100
Video In
J? Phono
C? 10n
R? 75
SCL
SDA
AUDIO IN
VIDEO IN
VCCA
VCCD
TVOVCC
TVOUT
LOP
XTAL
PRE-EM
SPLL-FILT
PLL-FILT
GND
MC44BS373CA
C? 27p
Y? 4MHz
C? 47n
R? 2k2
C? 22n
C? 1n
R? 330
R? 27
J? Coax
RF Out
Audio In Left
Audio In Right
R? 50k
R? 68k
TR? NPN
C? 10u
R? 100k
R? 1k
R? 10k
Audio Level
R? 2k2
R? 5k
Sound RF Level
R? 4k7
R? 100k
TR? PNP
Copyright 2005 David Robinson
All rights reserved.
This design and drawing issued free of charge for personal, private and non-commercial use only.
David Robinson
Title
System A Modulator
Size
A3
Document Number
Rev
Date:
Monday, February 28, 2005
Sheet 1 of 1
Easy PDF Creator is professional software to create PDF. If you wish to remove this line, buy it now.