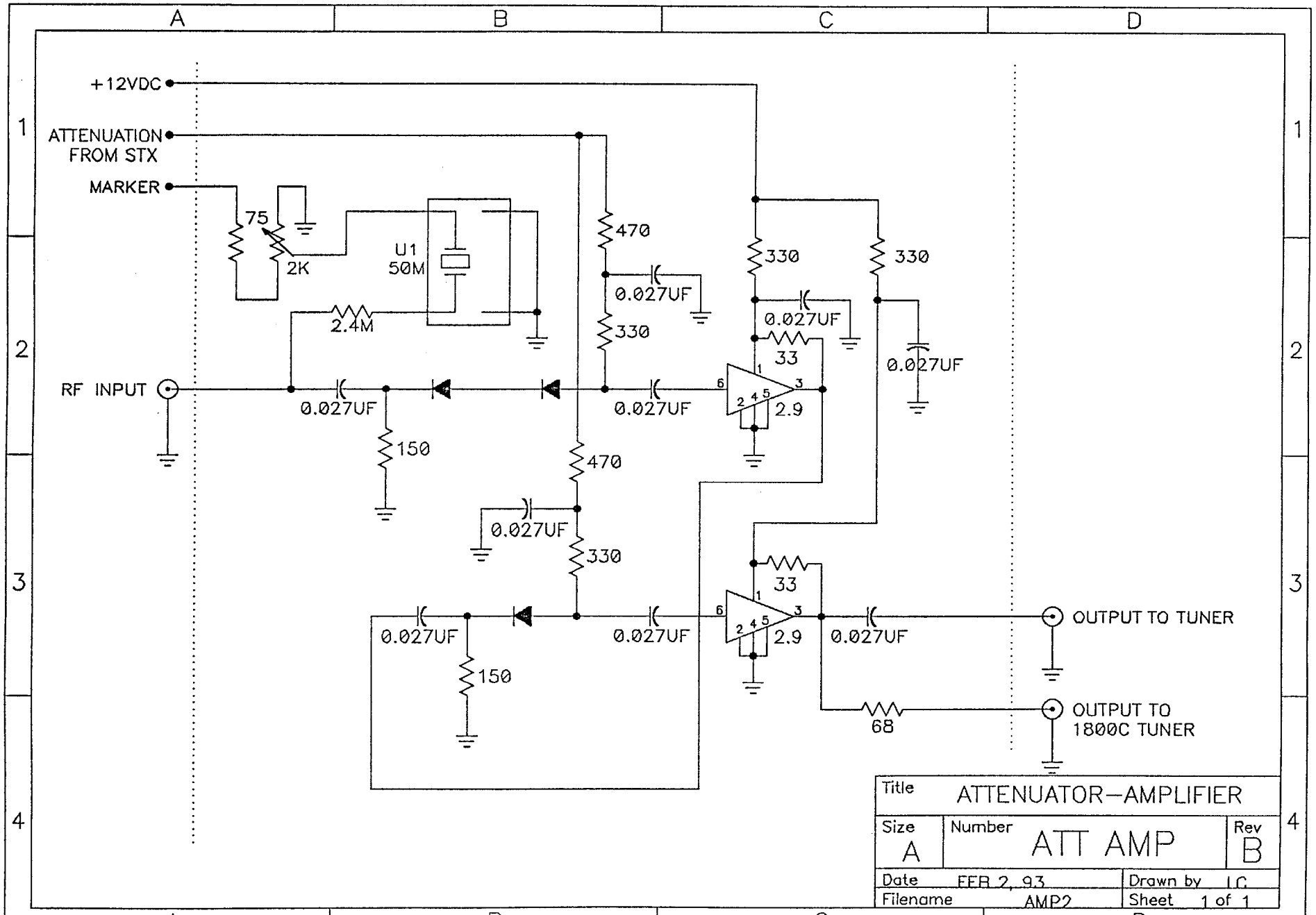
A
B
C
D
1
2
3
4
+12VDC
ATTENUATION FROM STX
MARKER
75
2K
U1
50M
2.4M
470
330
0.027UF
330
330
0.027UF
33
0.027UF
RF INPUT
0.027UF
150
0.027UF
2.9
470
0.027UF
330
33
0.027UF
150
0.027UF
2.9
0.027UF
OUTPUT TO TUNER
68
OUTPUT TO 1800C TUNER
Title
ATTENUATOR–AMPLIFIER
Size
A
Number
ATT AMP
Rev
B
Date
FEB 2, 93
Drawn by
LC
Filename
AMP2
Sheet
1 of 1

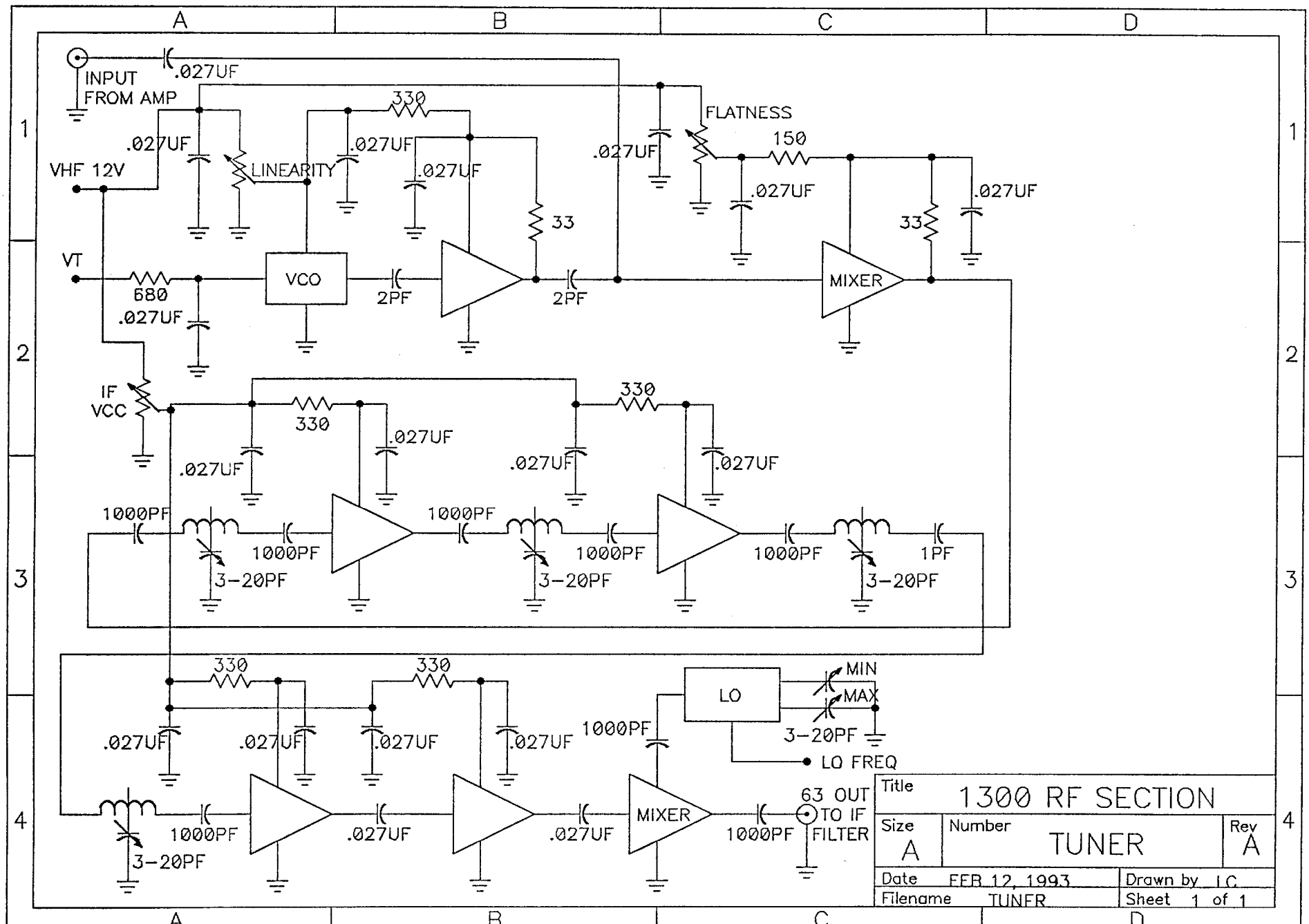
INPUT FROM AMP
.027UF
VHF 12V
LINEARITY
330
.027UF
33
FLATNESS
150
VT
680
VCO
2PF
MIXER
IF VCC
1000PF
3-20PF
1PF
LO
MIN
MAX
LO FREQ
63 OUT TO IF FILTER
Title 1300 RF SECTION
Size A
Number TUNER
Rev A
Date FEB 12, 1993
Drawn by J.C.
Filename TUNER
Sheet 1 of 1

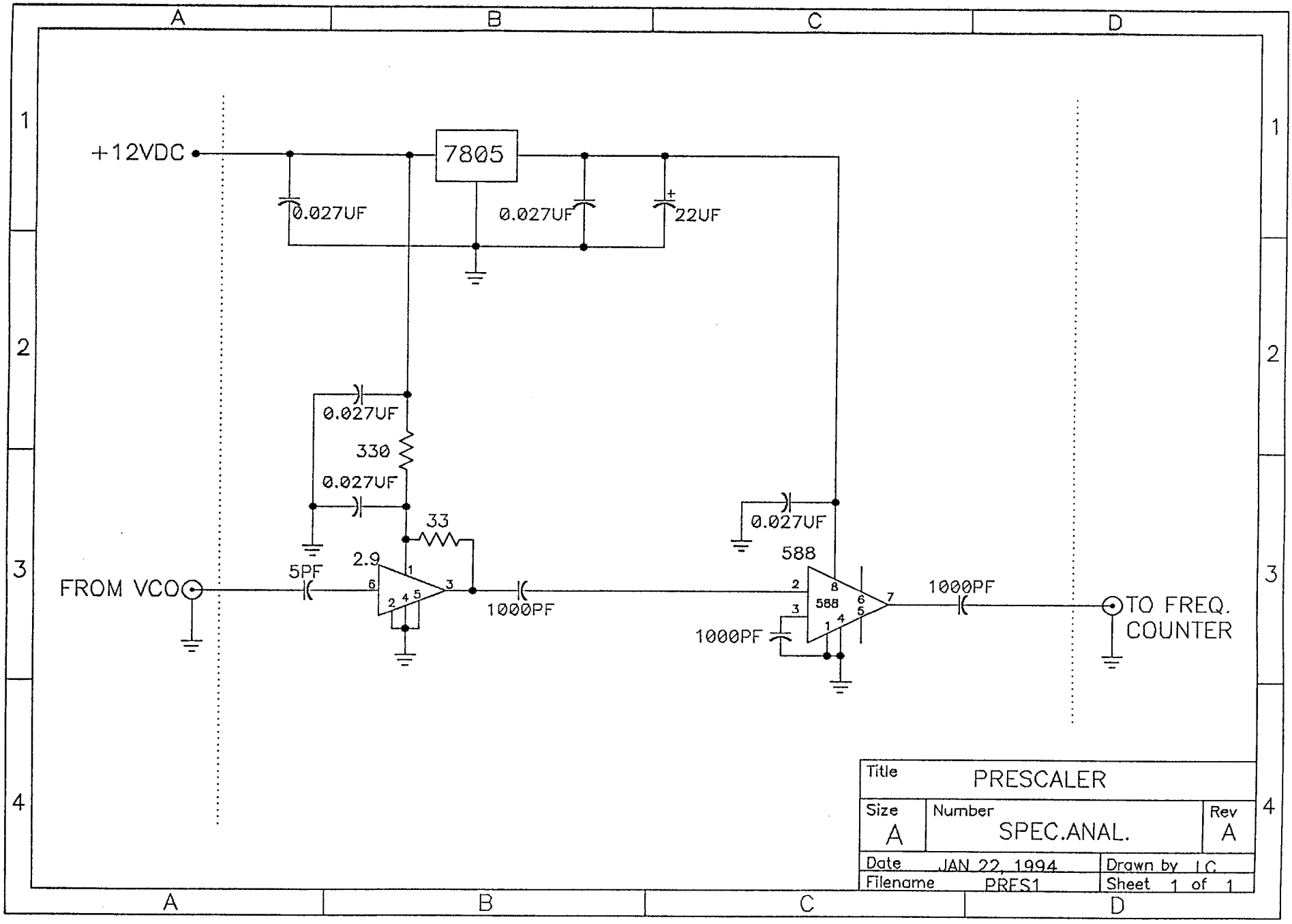
+12VDC
7805
0.027UF
0.027UF
22UF
0.027UF
330
0.027UF
33
2.9
5PF
FROM VCO
1000PF
0.027UF
588
588
1000PF
1000PF
TO FREQ.
COUNTER
Title
PRESCALER
Size
A
Number
SPEC.ANAL.
Rev
A
Date
JAN 22, 1994
Drawn by
I.C.
Filename
PRES1
Sheet
1 of 1

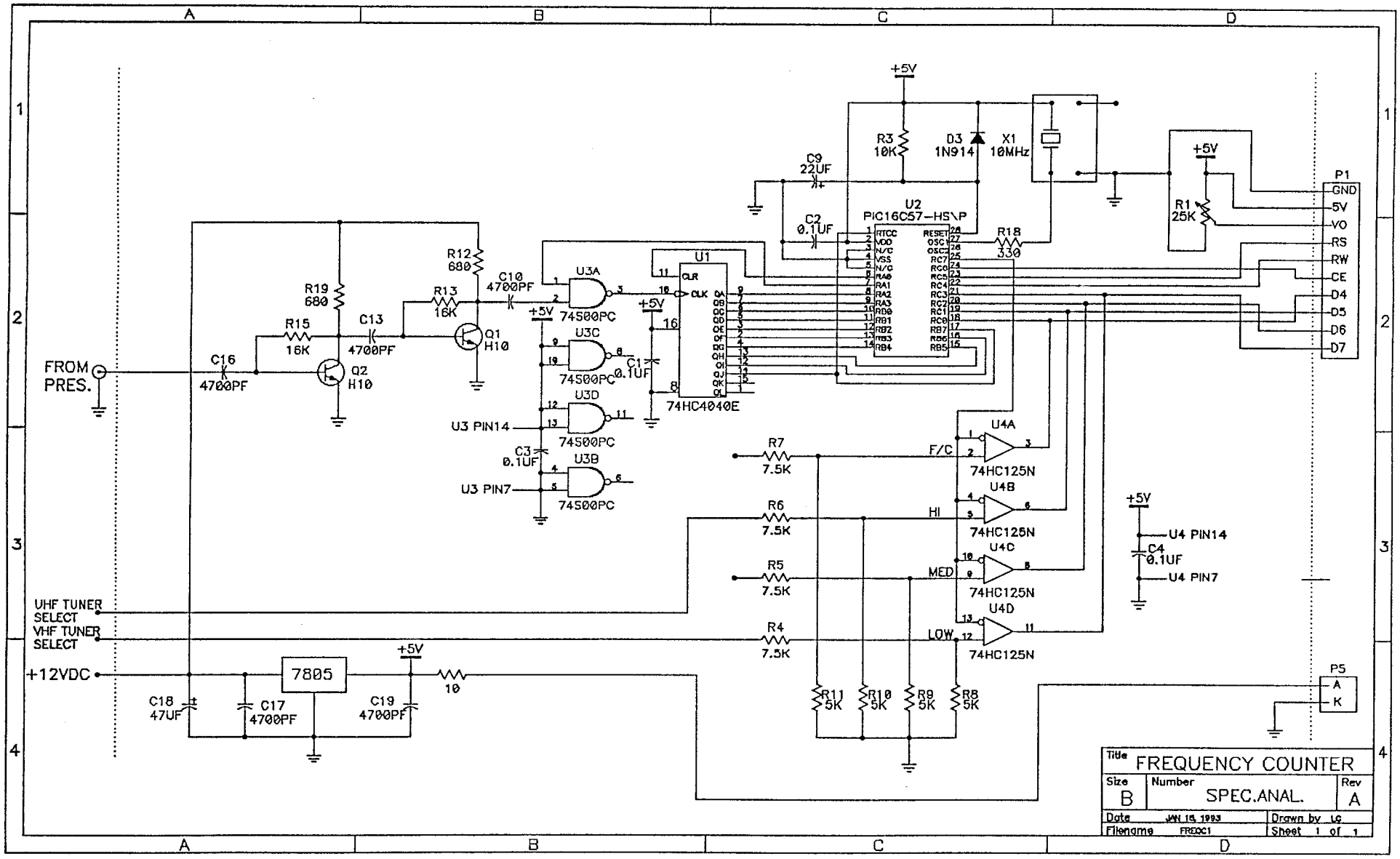
FROM PRES.
C16 4700PF
R15 16K
R19 680
Q2 H10
C13 4700PF
R13 16K
R12 680
Q1 H10
C10 4700PF
U3A 74500PC
U3C 74500PC
U3D 74500PC
U3B 74500PC
U3 PIN14
U3 PIN7
C3 0.1UF
C1 0.1UF
U1 74HC4040E
CLR
CLK
+5V
C9 22UF
C2 0.1UF
R3 10K
D3 1N914
X1 10MHz
U2 PIC16C57-HS\P
RTCC
VDD
N/C
VSS
N/C
RA0
RA1
RA2
RA3
RB0
RB1
RB2
RB3
RB4
RESET
OSC1
OSC2
RC7
RC0
RC5
RC4
RC3
RC2
RC1
RC0
RB7
RB6
RB5
R18 330
R1 25K
P1
GND
5V
VO
RS
RW
CE
D4
D5
D6
D7
R7 7.5K
R6 7.5K
R5 7.5K
R4 7.5K
F/C
HI
MED
LOW
U4A 74HC125N
U4B 74HC125N
U4C 74HC125N
U4D 74HC125N
U4 PIN14
C4 0.1UF
U4 PIN7
R11 5K
R10 5K
R9 5K
R8 5K
P5
A
K
UHF TUNER SELECT
VHF TUNER SELECT
+12VDC
7805
C18 47UF
C17 4700PF
C19 4700PF
10
Title FREQUENCY COUNTER
Size B
Number SPEC.ANAL.
Rev A
Date JAN 15, 1993
Drawn by LG
Filename FREQC1
Sheet 1 of 1

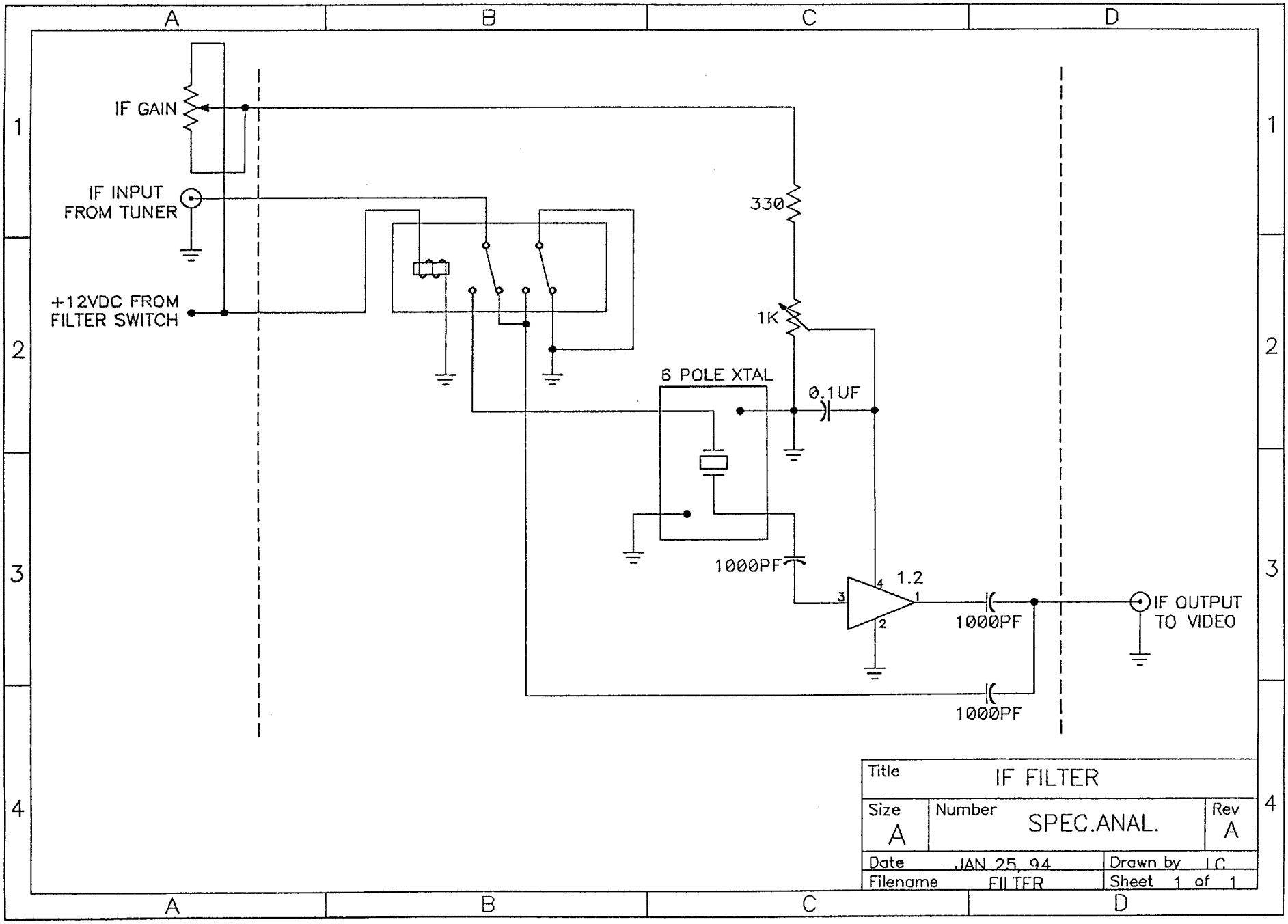
IF GAIN
IF INPUT
FROM TUNER
+12VDC FROM
FILTER SWITCH
330
1K
6 POLE XTAL
0.1UF
1000PF
1.2
1000PF
1000PF
IF OUTPUT
TO VIDEO
Title
IF FILTER
Size
A
Number
SPEC.ANAL.
Rev
A
Date
JAN 25, 94
Drawn by
LC
Filename
FILTER
Sheet 1 of 1

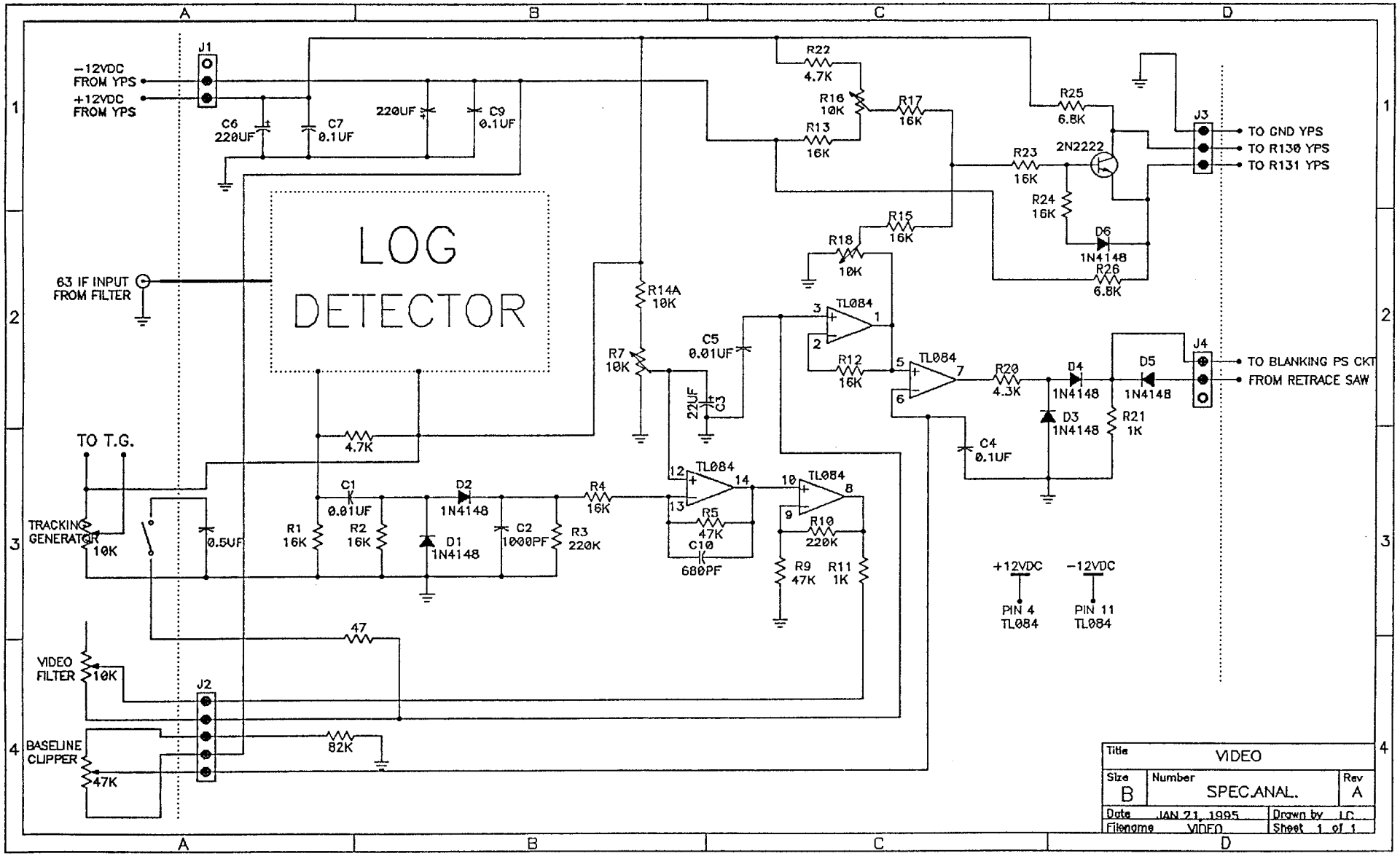
-12VDC FROM YPS
+12VDC FROM YPS
J1
C6 220UF
C7 0.1UF
220UF
C9 0.1UF
LOG DETECTOR
63 IF INPUT FROM FILTER
TO T.G.
TRACKING GENERATOR 10K
0.5UF
R1 16K
R2 16K
C1 0.01UF
D1 1N4148
D2 1N4148
C2 1000PF
R3 220K
4.7K
R4 16K
R14A 10K
R7 10K
C5 0.01UF
22UF C3
TL084
R5 47K
C10 680PF
R9 47K
R10 220K
R11 1K
R12 16K
R13 16K
R22 4.7K
R16 10K
R17 16K
R15 16K
R18 10K
R20 4.3K
D3 1N4148
D4 1N4148
D5 1N4148
R21 1K
C4 0.1UF
R23 16K
R24 16K
R25 6.8K
R26 6.8K
2N2222
D6 1N4148
J3
TO GND YPS
TO R130 YPS
TO R131 YPS
J4
TO BLANKING PS CKT
FROM RETRACE SAW
+12VDC PIN 4 TL084
-12VDC PIN 11 TL084
47
VIDEO FILTER 10K
J2
BASELINE CLIPPER 47K
82K
Title VIDEO
Size B
Number SPEC.ANAL.
Rev A
Date JAN 21, 1995
Drawn by J.C.
Filename VIDEO
Sheet 1 of 1

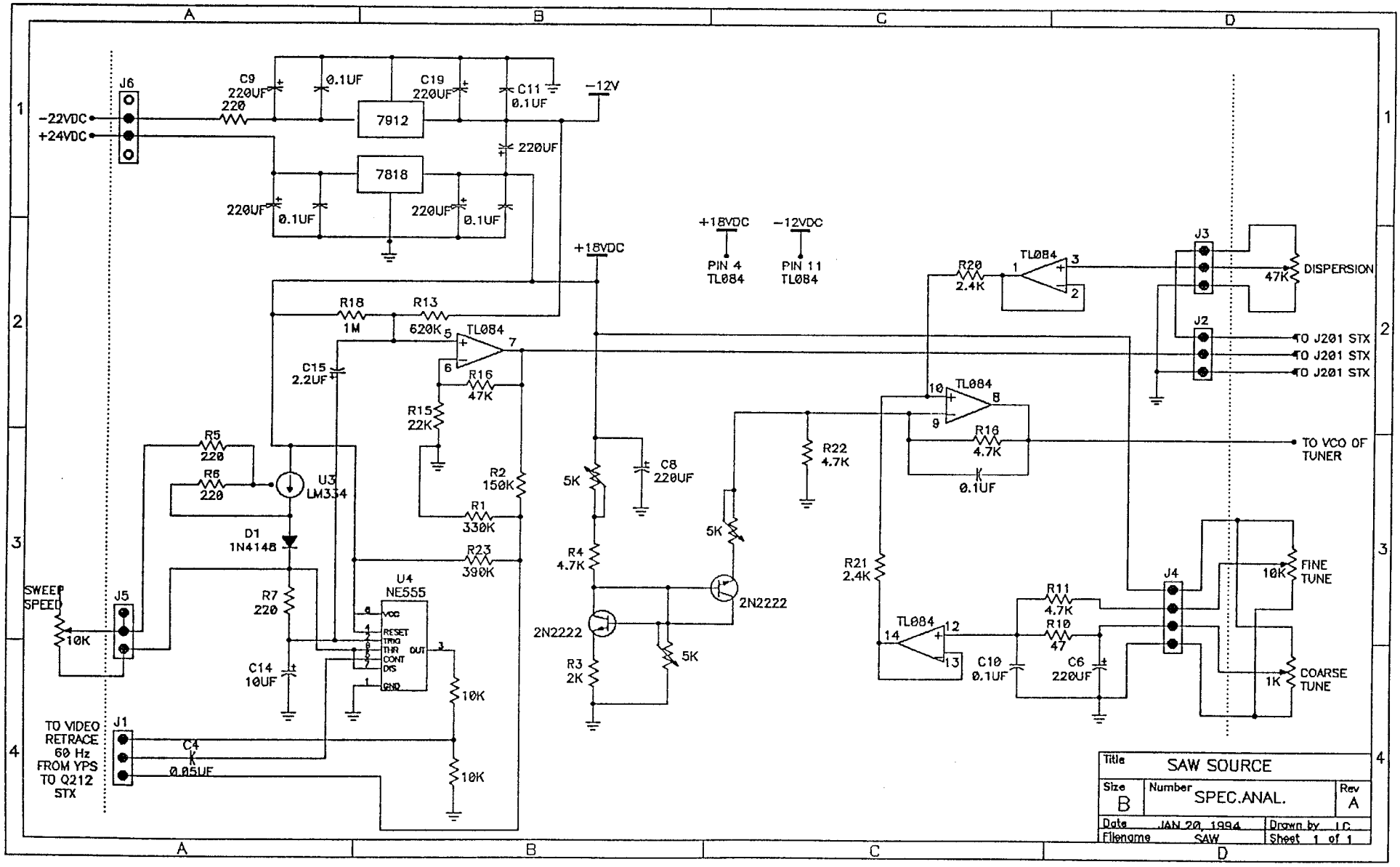
J6
-22VDC
+24VDC
C9
220UF
220
0.1UF
C19
220UF
C11
0.1UF
-12V
7912
7818
220UF
0.1UF
220UF
0.1UF
220UF
+18VDC
-12VDC
PIN 4
TL084
PIN 11
TL084
+18VDC
R18
1M
R13
620K
TL084
C15
2.2UF
R16
47K
R15
22K
R5
220
R6
220
U3
LM334
D1
1N4148
R2
150K
R1
330K
R23
390K
U4
NE555
VCC
RESET
TRIG
THR
CONT
DIS
GND
OUT
R7
220
C14
10UF
10K
10K
SWEEP
SPEED
J5
10K
J1
TO VIDEO
RETRACE
60 Hz
FROM YPS
TO Q212
STX
C4
0.05UF
5K
C8
220UF
R4
4.7K
2N2222
R3
2K
5K
5K
2N2222
R22
4.7K
R20
2.4K
TL084
J3
DISPERSION
47K
J2
TO J201 STX
TO J201 STX
TO J201 STX
TL084
R19
4.7K
0.1UF
TO VCO OF
TUNER
R21
2.4K
TL084
R11
4.7K
R10
47
C10
0.1UF
C6
220UF
J4
FINE
TUNE
10K
COARSE
TUNE
1K
Title
SAW SOURCE
Size
B
Number
SPEC.ANAL.
Rev
A
Date
JAN 20, 1994
Drawn by
I.C.
Filename
SAW
Sheet
1 of 1

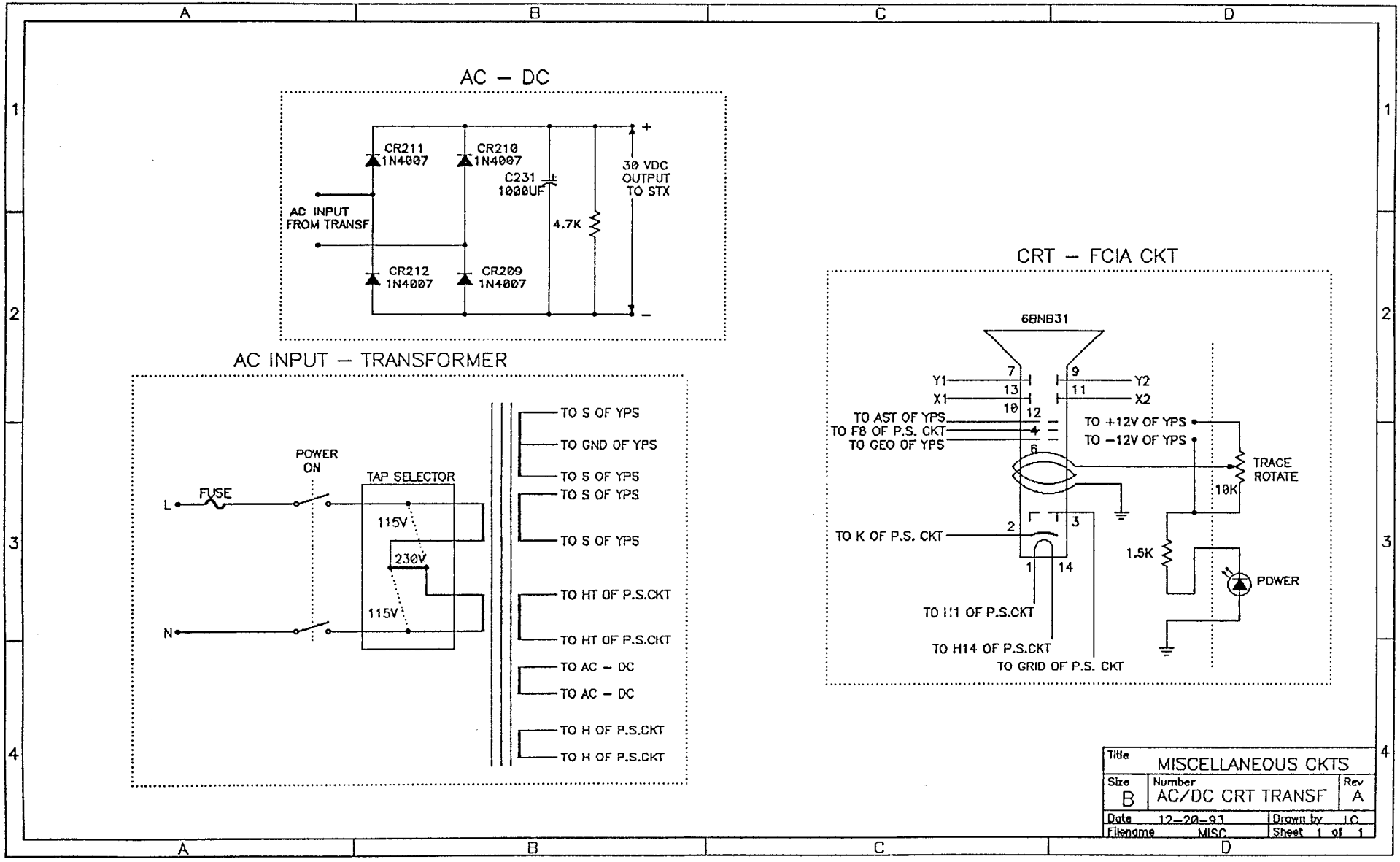
AC – DC
CR211
1N4007
CR210
1N4007
C231
1000UF
30 VDC
OUTPUT
TO STX
AC INPUT
FROM TRANSF
4.7K
CR212
1N4007
CR209
1N4007
AC INPUT – TRANSFORMER
POWER
ON
TAP SELECTOR
FUSE
L
N
115V
230V
115V
TO S OF YPS
TO GND OF YPS
TO S OF YPS
TO S OF YPS
TO S OF YPS
TO HT OF P.S.CKT
TO HT OF P.S.CKT
TO AC – DC
TO AC – DC
TO H OF P.S.CKT
TO H OF P.S.CKT
CRT – FCIA CKT
6BNB31
Y1
X1
Y2
X2
TO AST OF YPS
TO F8 OF P.S. CKT
TO GEO OF YPS
TO +12V OF YPS
TO –12V OF YPS
TRACE
ROTATE
10K
TO K OF P.S. CKT
1.5K
POWER
TO H1 OF P.S.CKT
TO H14 OF P.S.CKT
TO GRID OF P.S. CKT
Title
MISCELLANEOUS CKTS
Size
B
Number
AC/DC CRT TRANSF
Rev
A
Date
12–20–93
Drawn by
LC
Filename
MISC
Sheet 1 of 1

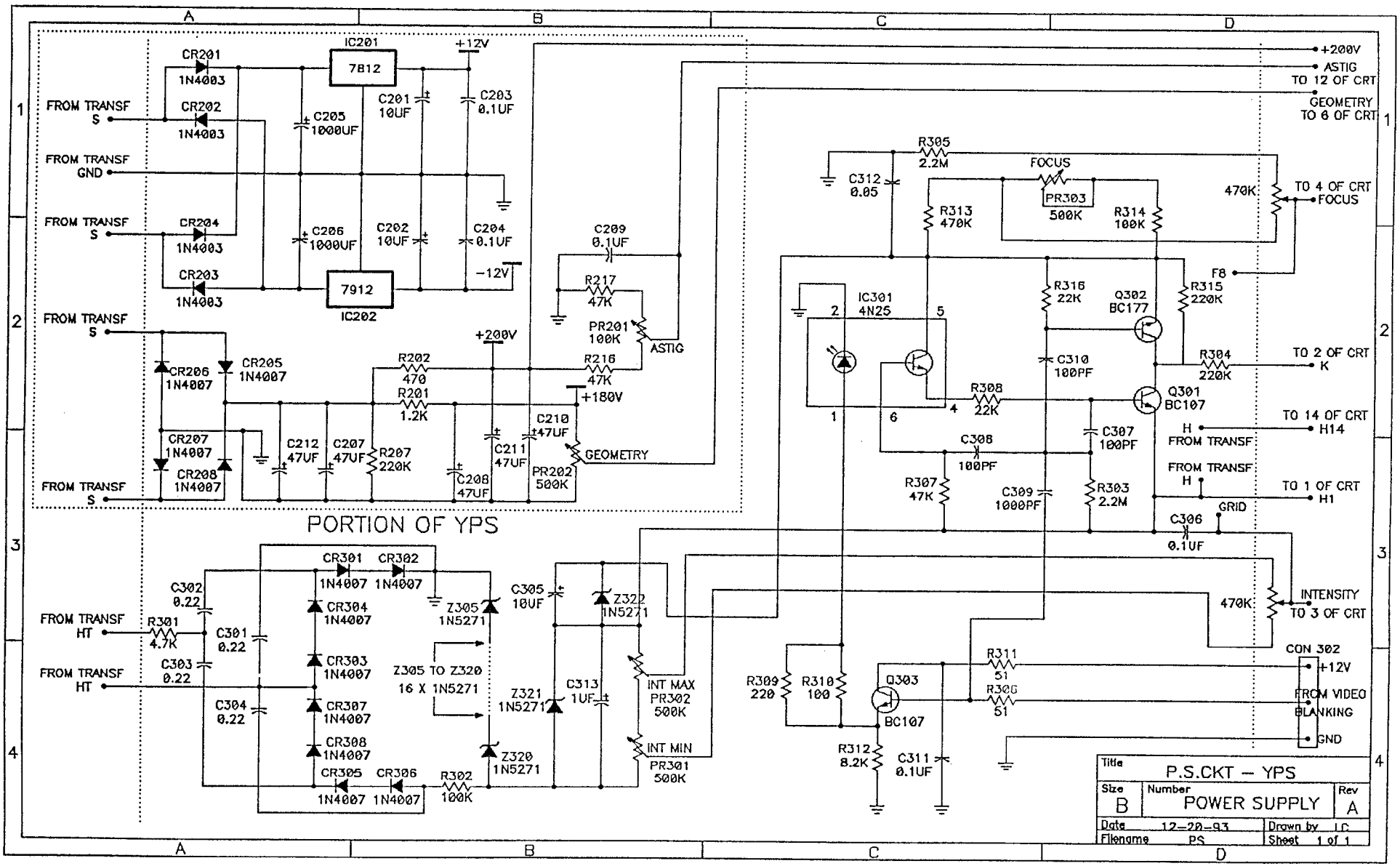
FROM TRANSF S
FROM TRANSF GND
FROM TRANSF S
FROM TRANSF S
FROM TRANSF S
FROM TRANSF S
CR201 1N4003
CR202 1N4003
CR204 1N4003
CR203 1N4003
IC201 7812
IC202 7912
+12V
-12V
C205 1000UF
C206 1000UF
C201 10UF
C202 10UF
C203 0.1UF
C204 0.1UF
CR206 1N4007
CR205 1N4007
CR207 1N4007
CR208 1N4007
+200V
R202 470
R201 1.2K
R207 220K
C212 47UF
C207 47UF
C208 47UF
C211 47UF
C210 47UF
+180V
C209 0.1UF
R217 47K
PR201 100K
ASTIG
R216 47K
PR202 500K
GEOMETRY
PORTION OF YPS
FROM TRANSF HT
FROM TRANSF HT
R301 4.7K
C302 0.22
C301 0.22
C303 0.22
C304 0.22
CR301 1N4007
CR302 1N4007
CR304 1N4007
CR303 1N4007
CR307 1N4007
CR308 1N4007
CR305 1N4007
CR306 1N4007
R302 100K
Z305 1N5271
Z305 TO Z320 16 X 1N5271
Z321 1N5271
Z320 1N5271
C305 10UF
Z322 1N5271
C313 1UF
INT MAX PR302 500K
INT MIN PR301 500K
+200V
ASTIG TO 12 OF CRT
GEOMETRY TO 6 OF CRT
R305 2.2M
C312 0.05
FOCUS
PR303 500K
R313 470K
R314 100K
470K
TO 4 OF CRT FOCUS
F8
IC301 4N25
R316 22K
Q302 BC177
R315 220K
C310 100PF
R304 220K
TO 2 OF CRT K
R308 22K
Q301 BC107
C307 100PF
H FROM TRANSF
TO 14 OF CRT H14
C308 100PF
FROM TRANSF H
TO 1 OF CRT H1
R307 47K
C309 1000PF
R303 2.2M
GRID
C306 0.1UF
470K
INTENSITY TO 3 OF CRT
R309 220
R310 100
Q303 BC107
R311 51
R306 51
CON 302
+12V
FROM VIDEO BLANKING
GND
R312 8.2K
C311 0.1UF
Title P.S.CKT – YPS
Size B
Number POWER SUPPLY
Rev A
Date 12-20-93
Drawn by LC
Filename PS
Sheet 1 of 1

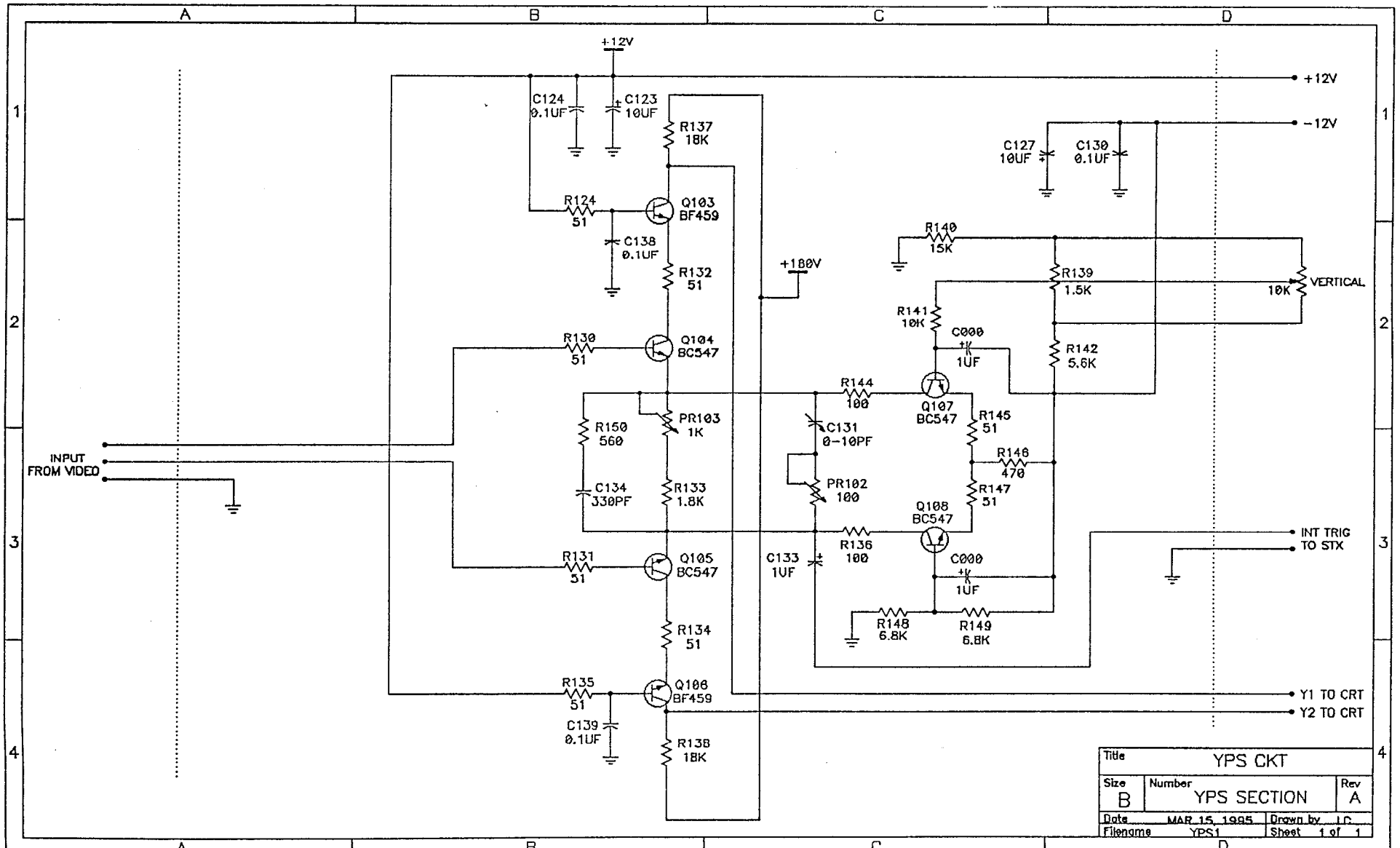
+12V
C124 0.1UF
C123 10UF
R137 18K
R124 51
Q103 BF459
C138 0.1UF
R132 51
+180V
R130 51
Q104 BC547
R150 560
PR103 1K
C134 330PF
R133 1.8K
INPUT FROM VIDEO
R131 51
Q105 BC547
R134 51
R135 51
Q106 BF459
C139 0.1UF
R138 18K
+12V
-12V
C127 10UF
C130 0.1UF
R140 15K
R139 1.5K
10K VERTICAL
R141 10K
C000 1UF
R142 5.6K
R144 100
Q107 BC547
R145 51
C131 0-10PF
R146 470
PR102 100
R147 51
Q108 BC547
R136 100
C133 1UF
C000 1UF
R148 6.8K
R149 6.8K
INT TRIG TO STX
Y1 TO CRT
Y2 TO CRT
Title YPS CKT
Size B
Number YPS SECTION
Rev A
Date MAR 15, 1995
Drawn by J.C.
Filename YPS1
Sheet 1 of 1

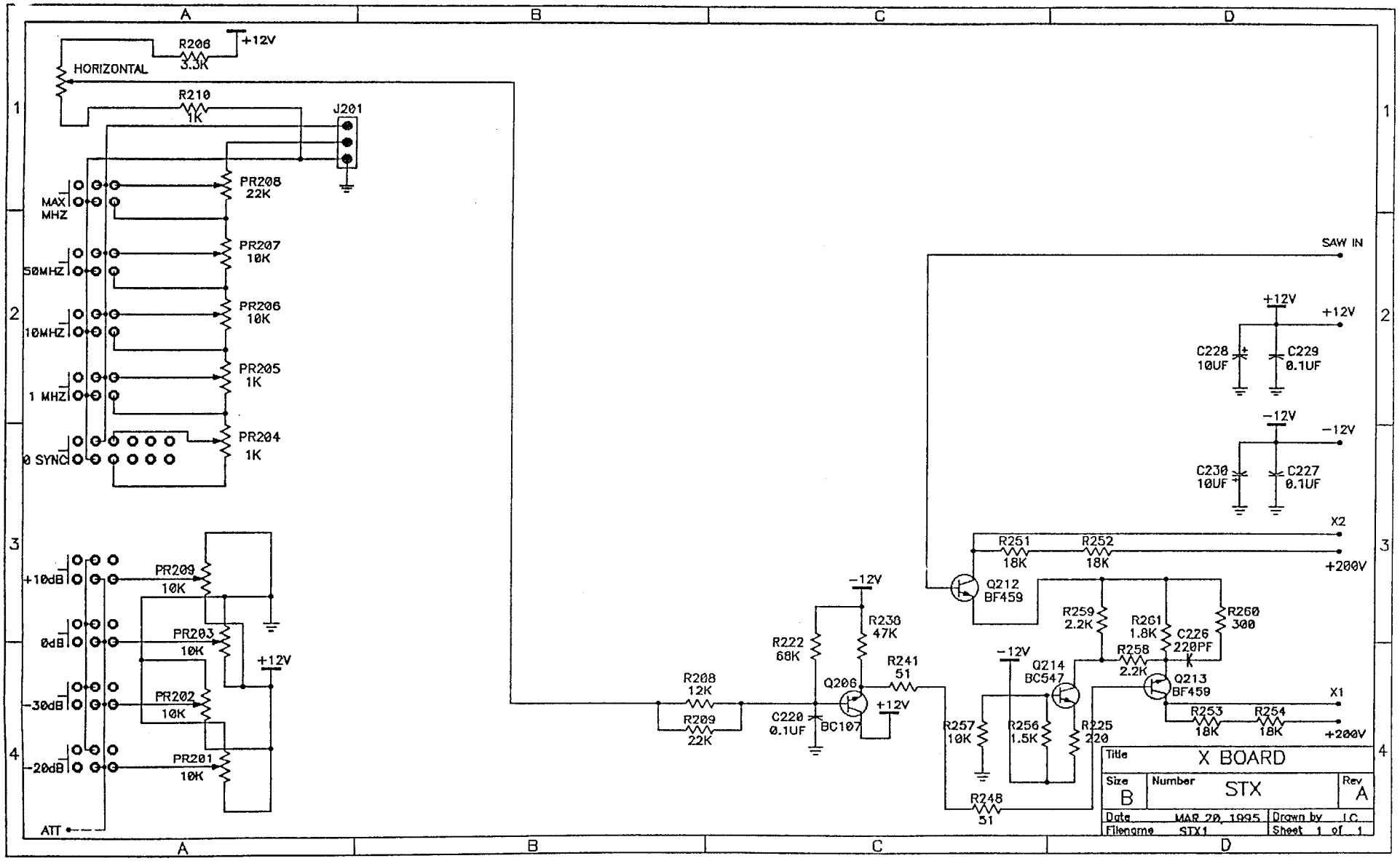
HORIZONTAL
R206
3.3K
+12V
R210
1K
J201
MAX MHZ
50MHZ
10MHZ
1 MHZ
0 SYNC
PR208
22K
PR207
10K
PR206
10K
PR205
1K
PR204
1K
+10dB
0dB
-30dB
-20dB
PR209
10K
PR203
10K
PR202
10K
PR201
10K
+12V
ATT
R208
12K
R209
22K
R222
68K
R230
47K
-12V
Q206
BC107
C220
0.1UF
R241
51
+12V
R248
51
SAW IN
Q212
BF459
R251
18K
R252
18K
X2
+200V
+12V
C228
10UF
C229
0.1UF
-12V
C230
10UF
C227
0.1UF
R259
2.2K
R261
1.8K
C226
220PF
R260
300
R258
2.2K
Q213
BF459
Q214
BC547
R257
10K
R256
1.5K
R225
220
R253
18K
R254
18K
X1
+200V
Title
X BOARD
Size
B
Number
STX
Rev
A
Date
MAR 20, 1995
Drawn by
LC
Filename
STX1
Sheet 1 of 1