www.freeservicemanuals.info

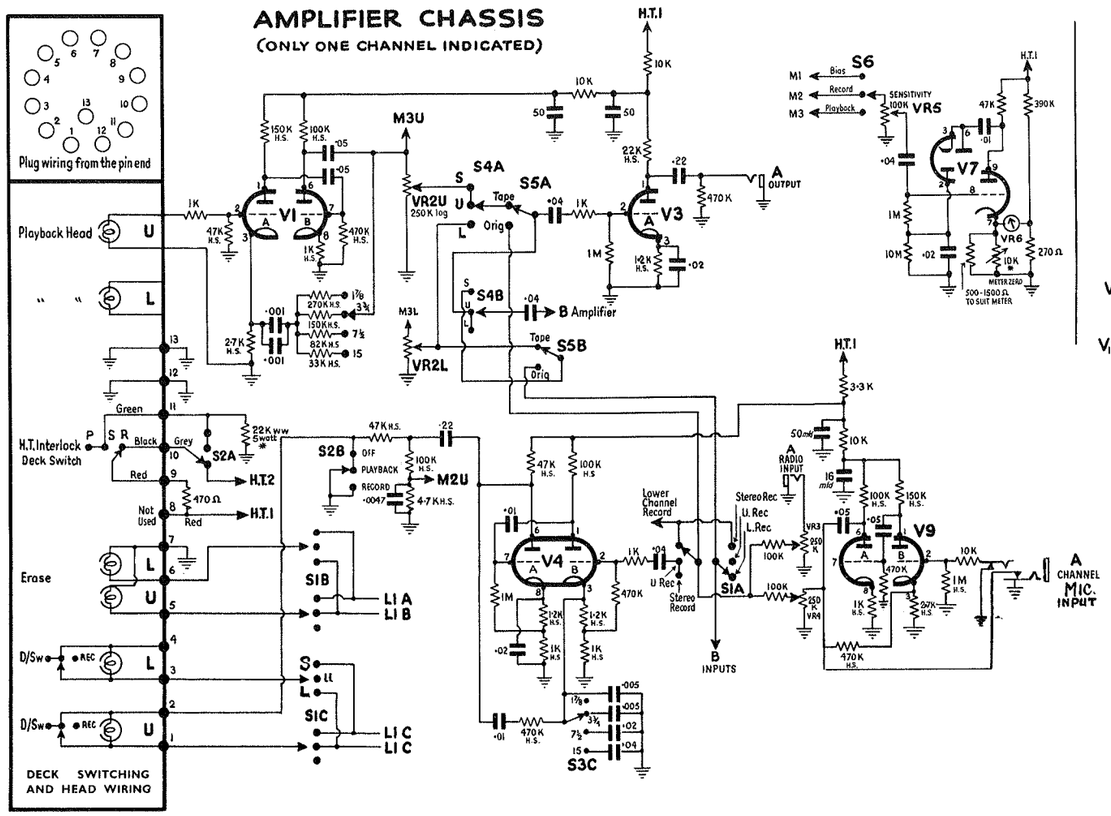

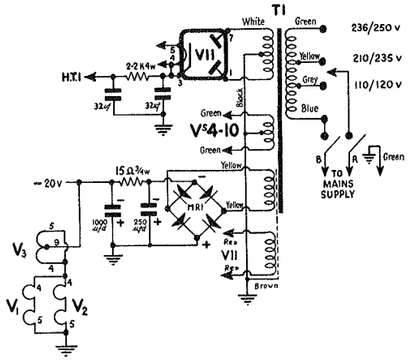

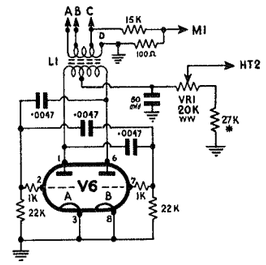

DECK WIRING DIAGRAM

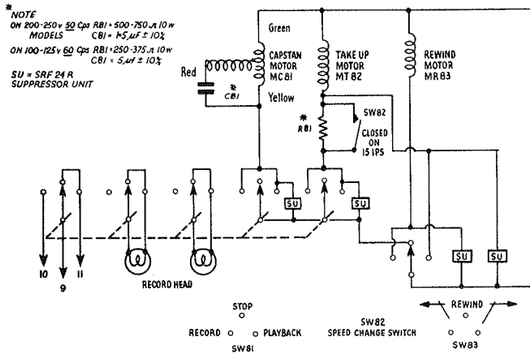

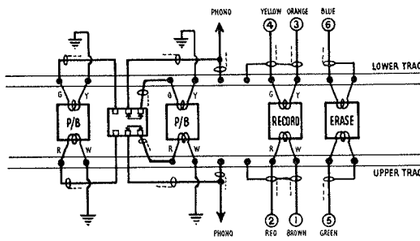

				ANODE V	CATHODE V
V 1	ECC83	U/T	P/B Amp	A 100	A 1·1
				B 85	B ·7
V 2	ECC83	L/T	P/B Amp	A 100	A 1·1
				B 85	B ·7
V 3	ECC81	A U/T	P/B Amp	A 140	A 2·35
		B L/T	P/B Amp	A 140	B 2·35
V 4	ECC81	U/T	Rec Amp	A 90	A 3
				B 145	B 4·25
V 5	ECC81	L/T	Rec Amp	A 90	A 3
				B 145	B 4·25
V 6	ECC82	OSCILLATOR (Bias Max)		A } 260 v. B }	
V 7	EABC80	U	Meter Amp	Pin 9 160	Pin 7 ·6
V 8	EABC80	L	Meter Amp	Pin 9 160	Pin 7 ·6
V 9	ECC83	U/T	Mic Amp	A 125	A 1·25
				B 115	B ·85
V 10	ECC83	L/T	Mic Amp	A 125	A 1·25
				B 115	B ·85
V 11	EZ80	RECTIFIER		320-320 ac.	360

Measured on AVO 8 - Record Function (Deck & Amps)

S 1	RECORDING TRACK SELECTOR SWITCH	Stereo Upper
S 2	FUNCTION SWITCH	Off Playback R
S 3	CORRECTION (FREQUENCY) SWITCH	15 7½ 3¾ 1⅞
S 4	PLAYBACK TRACK SELECTOR SWITCH	Stereo Upper
S 5	MONITOR SWITCH (COMPARATOR)	Original Tape
S 6	METER SWITCH	Playback Recor

V R 1	BIAS CONTROL
V R 2	PLAYBACK - VOLUME CONTROL (Ganged)
V R 3	RADIO - VOLUME CONTROL (Ganged)
V R 4	MICROPHONE - VOLUME CONTROL (Ganged)
V R 5	SENSITIVITY (METER) CONTROL (One per meter)
V R 6	METER ZERO CONTROL (One per meter)

*These components are subject to change between units.

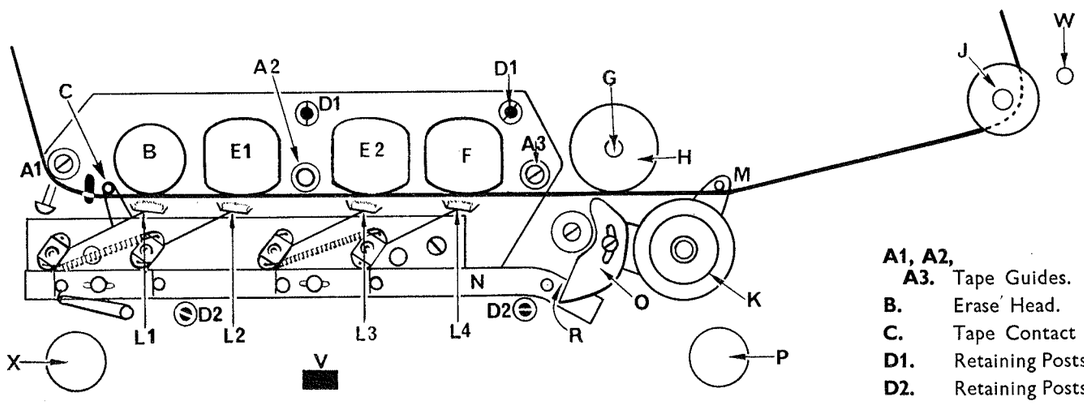

A1, A2, A3.	Tape Guides.	**K.**	Rubber Pinch Wheel.
B.	Erase Head.	**L1, L2, L3 and L4.**	Pressure Pads.
C.	Tape Contact Release Pin.	**M.**	Take-up Pin.
D1.	Retaining Posts for upper half Head Cover.	**N.**	Pressure Pad Operating Lever.
D2.	Retaining Posts for lower half Head Cover.	**O.**	Crescent-shaped Lever.
E1.	Record Head.	**P.**	Pause Control.
E2.	Playback Head.	**R.**	$\frac{1}{16}$" free movement.
F.	Extra Playback Head.	**S.**	Speed Change Switch.
G.	Capstan Shaft.	**V.**	Playback Head Selector Switch.
H.	Capstan Sleeve.	**W.**	Supplementary Guide Pillar.
J.	Adjustable Rotary Tape Guide.	**X.**	Superimpose Control.

Published in Heiloo, Holland.