Publication No. WD2812
2/92
Supersedes WD2812
4/90

DIAGRAMS
for the
Kodak XL7700 and XLT7720
DIGITAL CONTINUOUS TONE PRINTERS

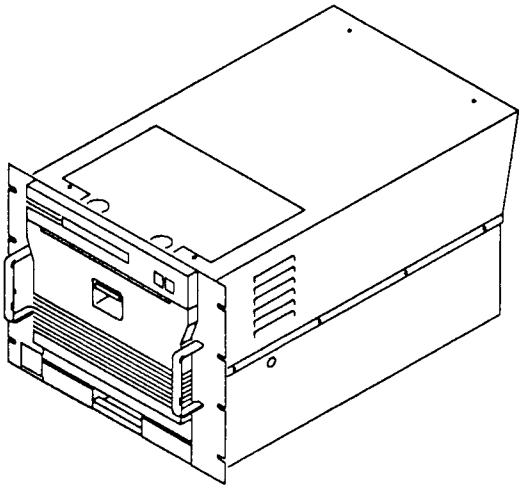

XL7700

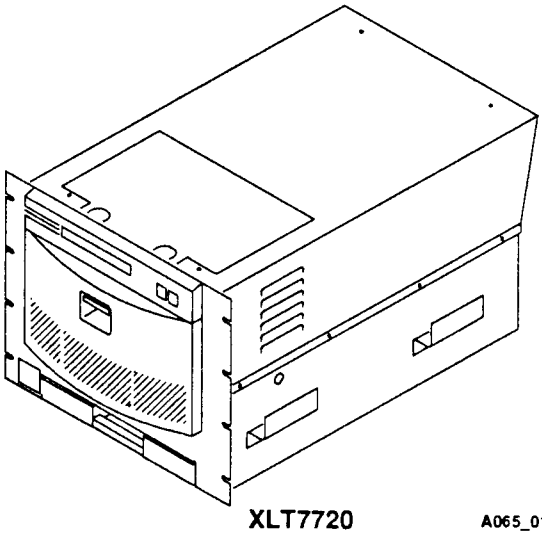

XLT7720

A065_0180BC

Eastman Kodak Company, 1992

PLEASE NOTE

The information contained herein is based on the experience and knowledge relating to the subject matter gained by Eastman Kodak Company prior to publication.

No patent license is granted by this information.

Eastman Kodak Company reserves the right to change this information without notice, and makes no warranty, express or implied, with respect to this information. Kodak shall not be liable for any loss or damage, including consequential or special damages, resulting from the use of this information, even if loss or damage is caused by Kodak's negligence or other fault.

CAUTION

This equipment includes parts and assemblies sensitive to damage from electrostatic discharge. Use caution to prevent damage during all service procedures.

TABLE OF CONTENTS

FIGURE	DESCRIPTION
Figure 1	I/O BOARD Schematic, Style 1, Model 7700
Figure 2	I/O BOARD Schematic, Style 1, Model 7700
Figure 3	I/O BOARD Schematic, Style 1, Model 7700
Figure 4	I/O BOARD Schematic, Style 1, Model 7700
Figure 5	I/O BOARD Components, Style 1, Model 7700
Figure 5A	I/O BOARD Schematic, Style 2, Model 7700
Figure 5B	I/O BOARD Schematic, Style 2, Model 7700
Figure 5C	I/O BOARD Schematic, Style 2, Model 7700
Figure 5D	I/O BOARD Schematic, Style 2, Model 7700
Figure 5E	I/O BOARD Components, Style 2, Model 7700
Figure 5F	I/O BOARD Schematic, Style 3, Models 7700 and 7720
Figure 5G	I/O BOARD Schematic, Style 3, Models 7700 and 7720
Figure 5H	I/O BOARD Schematic, Style 3, Models 7700 and 7720
Figure 5I	I/O BOARD Schematic, Style 3, Models 7700 and 7720
Figure 5J	I/O BOARD Components, Style 3, Models 7700 and 7720
Figure 6	DSP BOARD Schematic, Models 7700 and 7720
Figure 7	DSP BOARD Schematic, Models 7700 and 7720
Figure 8	DSP BOARD Schematic, Models 7700 and 7720
Figure 9	DSP BOAD Components, Models 7700 and 7720
Figure 10	FRAME DRIVER Schematic, Style 1, Model 7700
Figure 11	FRAME DRIVER Components, Style 1, Model 7700
Figure 11A	FRAME DRIVER Components, Style 2, Models 7700 and 7720
Figure 11B	FRAME DRIVER Schematic, Style 2, Models 7700 and 7720
Figure 11C	FRAME DRIVER Schematic, Style 2, Models 7700 and 7720
Figure 11D	FRAME DRIVER Schematic, Style 2, Models 7700 and 7720
Figure 11E	FRAME DRIVER Schematic, Style 2, Models 7700 and 7720
Figure 11F	FRAME DRIVER Schematic, Style 2, Models 7700 and 7720
Figure 12	FRAME SENSOR Schematic, Models 7700 and 7720
Figure 13	FRAME SENSOR Components, Models 7700 and 7720
Figure 14	FRAME SENSOR, B/W Schematic, Model 7700
Figure 15	FRAME SENSOR Components, B/W, Model 7700
Figure 16	FRONT PANEL Schematic, Models 7700 and 7720
Figure 17	FRONT PANEL Components, Models 7700 and 7720
Figure 18	FUSER CONTROLLER Schematic, Model 7700
Figure 19	FUSER CONTROLLER Schematic, Style 1, Model 7700
Figure 20	FUSER CONTROLLER Schematic, Style 1, Model 7700
Figure 21	FUSER CONTROLLER Components, Style 1, Model 7700
Figure 21A	FINISHER CONTROLLER Schematic, Style 2, Models 7700 and 7720
Figure 21B	FINISHER CONTROLLER Components, Style 2, Models 7700 and 7720
Figure 21C	FINISHER CONTROLLER Components, Style 2, Models 7700 and 7720
Figure 22	PRE-HEAT DRIVER Schematic, Model 7700

TABLE OF CONTENTS (CONTINUED)

FIGURE	DESCRIPTION
Figure 23	PRE-HEAT DRIVER Components, Model 7700
Figure 23A	PRE-HEAT DRIVER Schematic, Model 7720
Figure 23B	PRE-HEAT DRIVER Schematic, Model 7720
Figure 23C	PRE-HEAT DRIVER Components, Model 7720
Figure 24	ADJUSTABLE REGULATOR Schematic, Models 7700 and 7720
Figure 25	ADJUSTABLE REGULATOR Components, Models 7700 and 7720
Figure 26	POWER DISTRIBUTION BOARD Schematic, Models 7700 and 7720
Figure 27	POWER DISTRIBUTION BOARD Components, Models 7700 and 7720
Figure 28	Interface Schematic, Models 7700 and 7720
Figure 29	Interface Components, Models 7700 and 7720
Figure 30	BACKPLANE Schematic, Models 7700 and7720
Figure 31	BACKPLANE Components, Models 7700 and 7720
Figure 32	Electrical Interconnect, Model 7700
Figure 32A	Electrical Interconnect, Model 7720
Figure 33	Signal Interconnect, Model 7700
Figure 33A	Electrical Interconnect, Model 7720
Figure 34	Cable Interconnects, Model 7700
Figure 34A	Cable Interconnects, Model 7720
Figure 35	Cable Interconnects, Model 7700
Figure 35A	Cable Interconnects, Model 7720
Figure 36	FRONT DOOR Interconnects, Model 7700
Figure 36A	FRONT DOOR Interconnects, Model 7720
Figure 37	FRONT DOOR Interconnects, Model 7700
Figure 37A	FRONT DOOR Interconnects, Model 7720
Figure 38	ASSEMBLY Interconnects, Model 7700
Figure 38A	ASSEMBLY Interconnects, Model 7720
Figure 39	FRONT BEZEL Connectors, Model 7700
Figure 39A	FRONT PANEL Interconnects, Model 7720
Figure 40	FINISHER Interconnect, Model 7700
Figure 40A	FINISHER Interconnect, Style 2, Models 7700 and 7720
Figure 41	FRAME Interconnect, Model 7700
Figure 41A	FRAME Interconnect, Model 7720
Figure 42	FRAME Connectors, Model 7700
Figure 42A	FRAME Connectors, Model 7720
Figure 43	Power Distribution, Model 7700
Figure 43A	Power Distribution, Model 7720
Figure 44	Power Connectors, Model 7700
Figure 44A	Power Connectors, Model 7720
Figure 45	Power Connectors, Model 7700
Figure 45A	Power Connectors, Model 7720
Figure 46	RECEIVER/PICKER Interconnect, Model 7720
Figure 47	RECEIVER/PICKER Interconnect, Model 7720

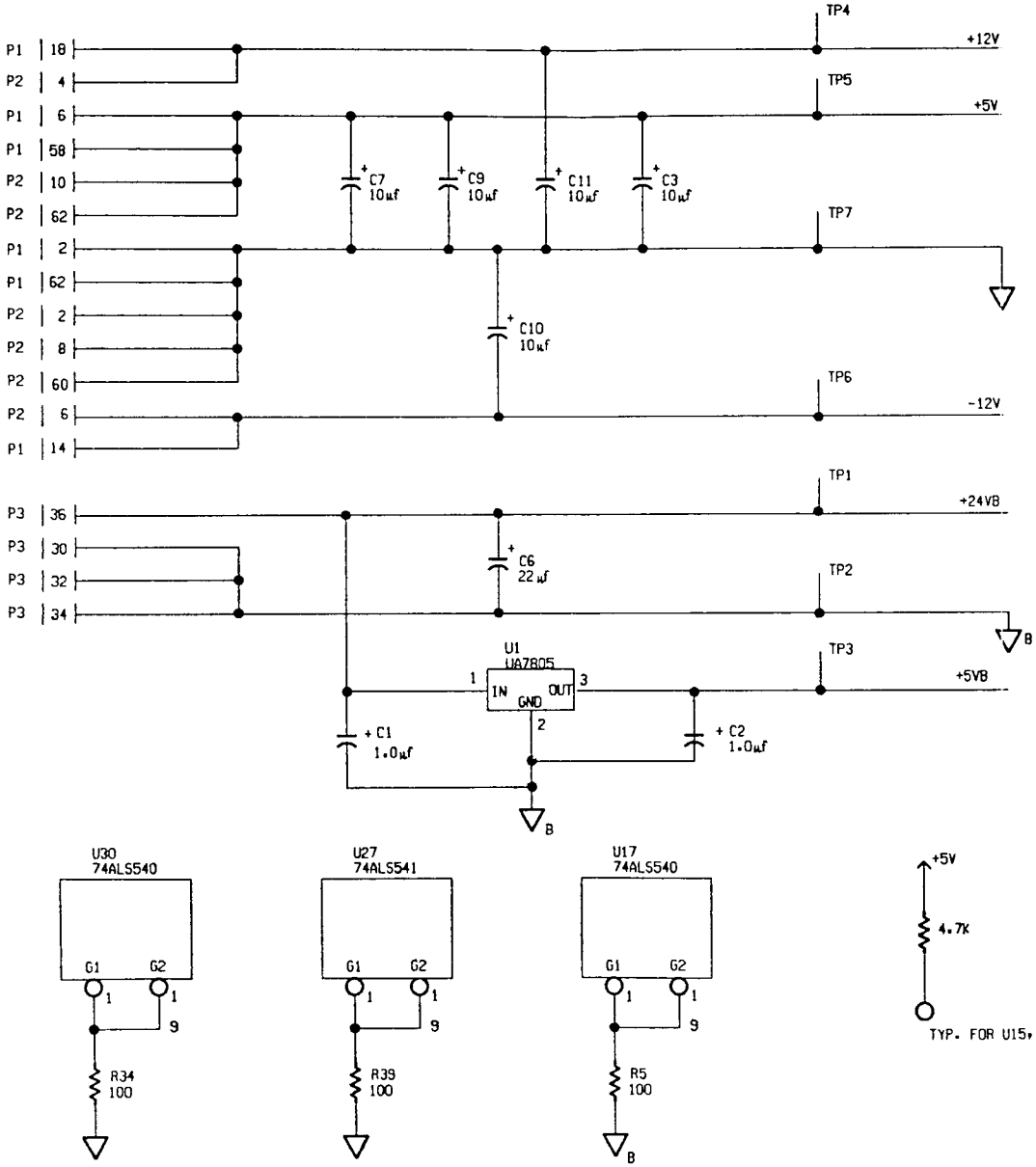

POWER TABLE

DESIG.	PART NO.	+5V	+12V	-12V	GND	+5VB	+24VB	GND
U1	UA7805							
U2	ILQ2							
U3	ILQ2							
U4	1K					16		
U5	ADC0844	20			7,10			
U6	74ALS996	24			12			
U7	74ALS573	20			10			
U8	74ALS245	20			10			
U9	74ALS573	20			10			
U10	74ALS996	24			12			
U11	74ALS996	24			12			
U12	74ALS573	20			10			
U13	74ALS573	20			10			
U14	74ALS573	20			10			
U15	4.7K	16						
U16	LM336-5.0							
U17	74ALS540					20		
U18	10K					16	16	
U19	22K							
U20	LM324		4	11				
U21	LM339		3		12			
U22	4.7K	16						
U23	74ALS00	14			7			
U24	4.7K	16						
U25	PAL20L8	24			12			
U26	PAL20L8	24			12			
U27	74ALS541	20			10			
U28	ULN2068					14		4,5,
U29	ULN2068					14		4,5,
U30	74ALS540	20			10			
U31	74LS221	16			8			
U32	74ALS74	14			7			
U33	74ALS74	14			7			
U34	74ALS245	20			10			

BYPASS CAPACITORS

+5V, GND:	C100-C112, C115-C122, C128-C132
+12V, GND:	C114
-12V, GND:	C127
+5VB, GNDB:	C113, C125, C126

Figure 1
I/O BOARD Schematic
Style 1
Model 7700

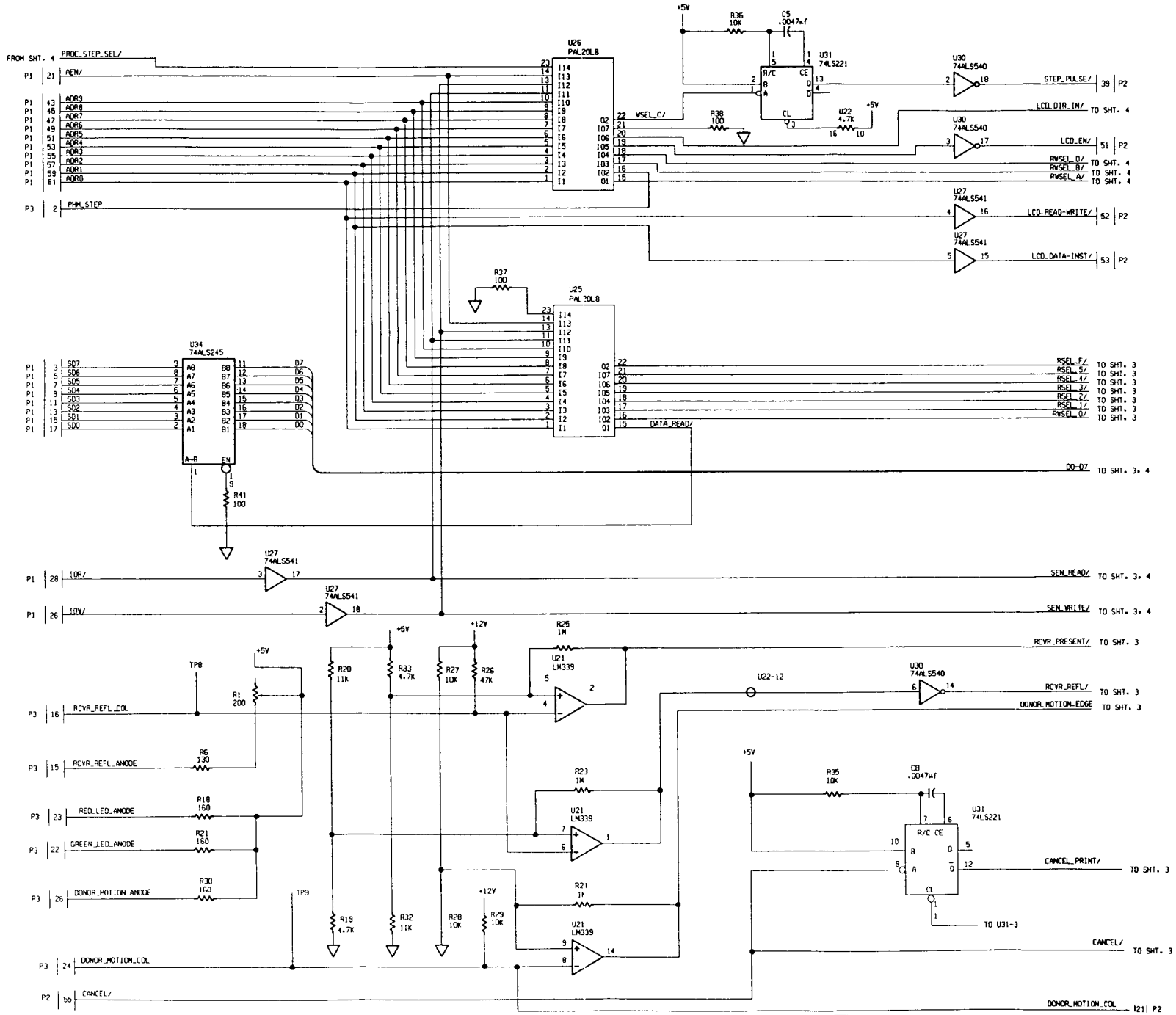

Figure 2
I/O BOARD Schei
Style 1
Model 7700

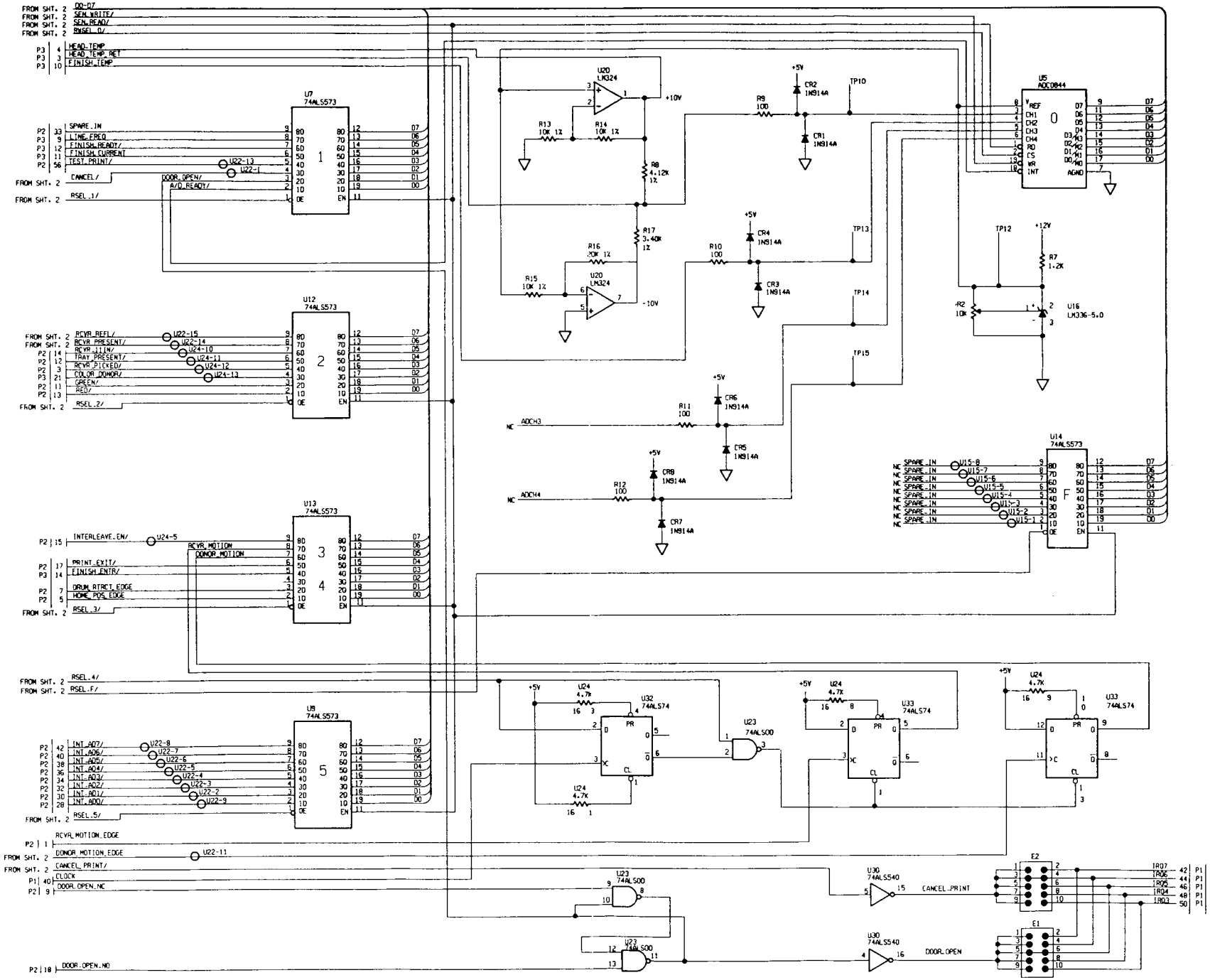

Figure 3
I/O BOARD Sc
Style 1
Model 7700

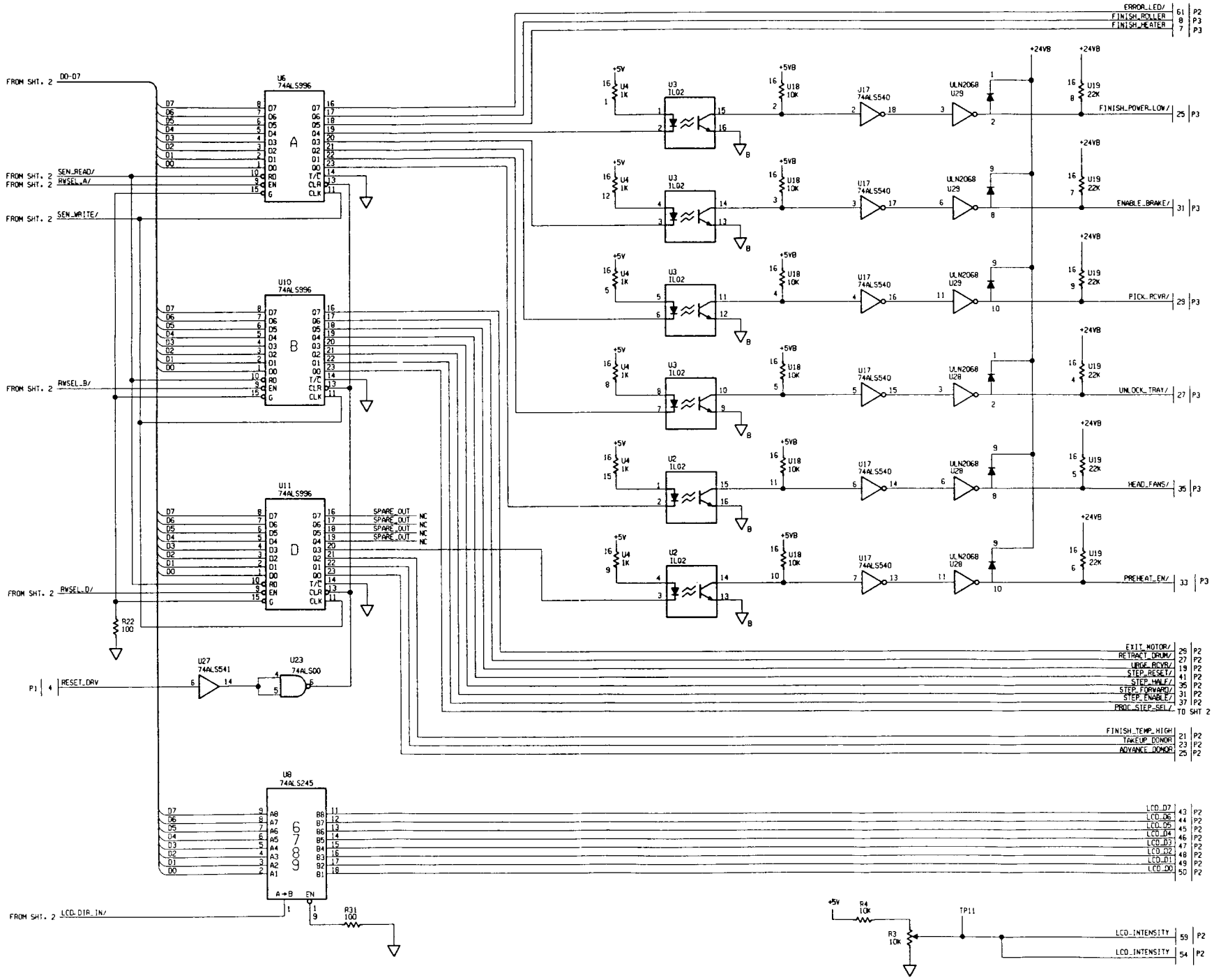

Figure 4
I/O BOARD
Style 1
Model 770

NOTES:

(1) 251460 SHUNT ASSY TO BE PLACED
E1 PINS 5-6
E2 PINS 3-4

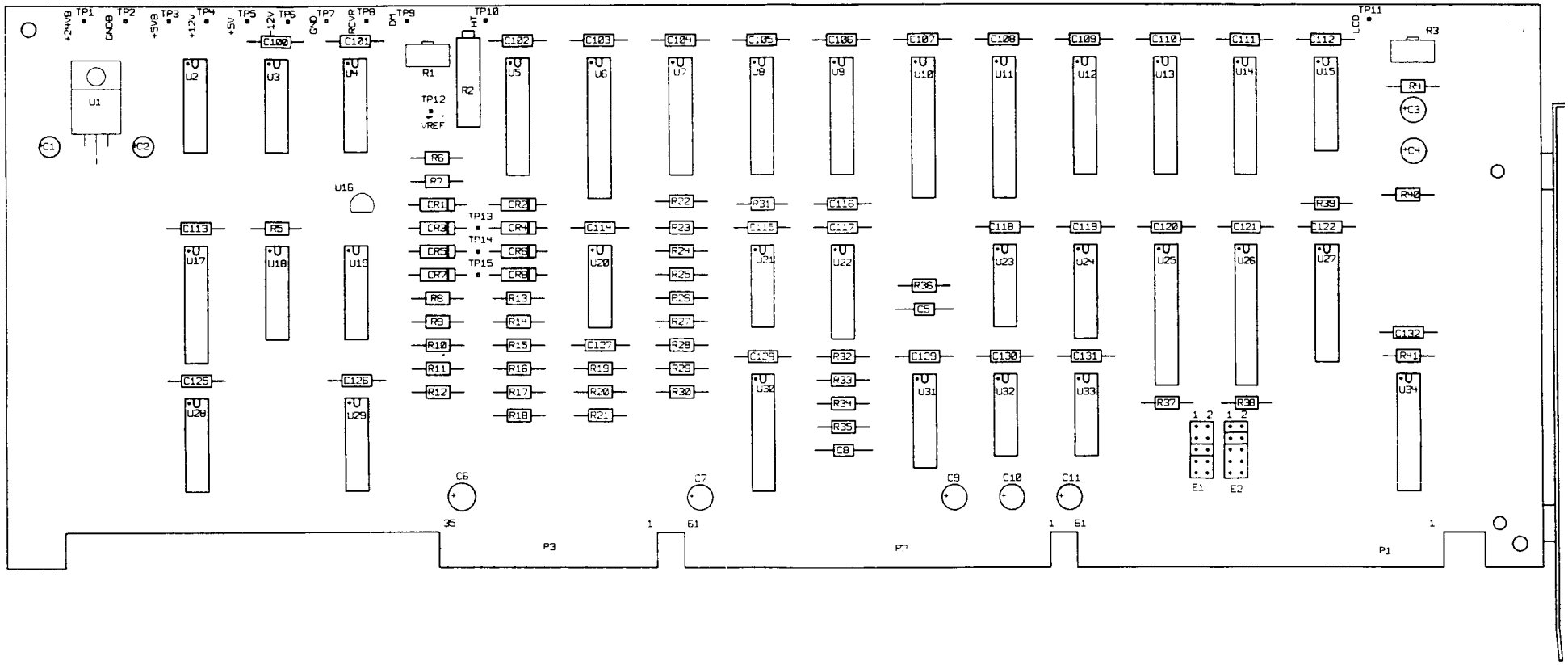

Figure 5
I/O BOARD Componen
Style 1
Model 7700

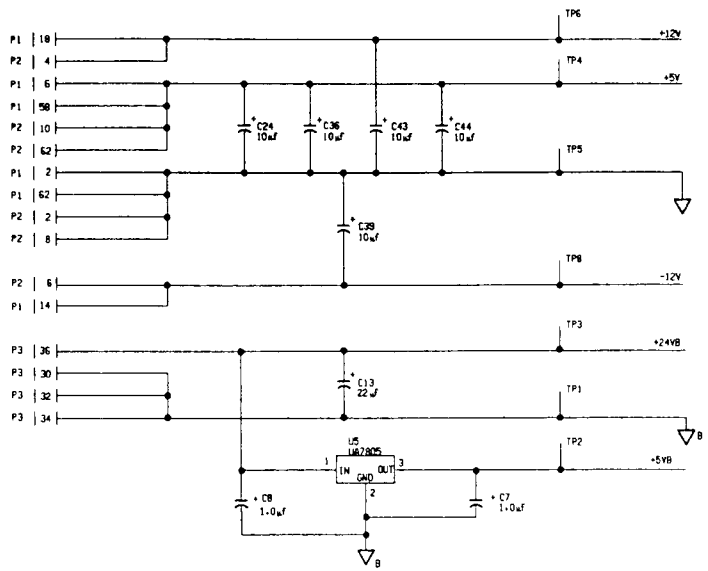

POWER TABLE

DESIG.	PART NO.	+5V	+12V	-12V	GND	+5VB	+24VB	GNDB	BYPASS CAPACITORS
U1 U2	ILQ2 74ALS540					 20		13,16 1,8,9,10,19	C1 C2
U3 U4	ULN2068 ILQ2					14	1,9	4,5,12,13 9,12,13,16	C3 C4
U5 U6	uA7805 10K					3 16	1	2	C7,C8 C5
U7 U8	1K 22K	16					 16		C6 C9
U9 U10	ULN2068 LM336-5.0				 3	14	1,9	4,5,12,13	C10
U11 U12	ADC0844 LM324	20	 4	 11	7,10 5,10,12				C14,C17 C15
U13 U14	74ALS573 74LS221	20 16			10 8				C18 C20
U15 U16	74ALS245 LM339	20	 3		10,19 11,12				C21 C22
U17 U18	74ALS540 74ALS573	20 20			1,7,8,9,10,19 10				C23 C25
U19 U20	4.7K 74HCT273	16 20			 10				C26 C27
U21 U22	74ALS240 74ALS240	20 20			1,10 19,10				C28 C29
U23 U24	74HCT273 74ALS240	20 20			10 1,10				C30 C31
U25 U26	74ALS240 74HCT273	20 20			19,10 10				C32 C33
U27 U28	74ALS240 74ALS240	20 20			1,10 19,10				C34 C35
U29 U30	74LS32 74LS32	10,13,14 14			7 7				C37 C38
U31 U32	74ALS573 74ALS00	20 14			10 7				C40 C41
U33 U34	74LS74 74ALS573	10,14 20			7,13 10				C42 C45
U35 U36	4.7K 74LS74	16 14			 7				C46 C47
U37 U38	74ALS573 PAL20L8	20 24			10 12				C48 C49
U39 U40	4.7K PAL20L8	16 24			 12				C50 C51
U41 U42	74ALS541 74ALS245	20 20			1,7,8,9,10,19 10,19				C53 C54

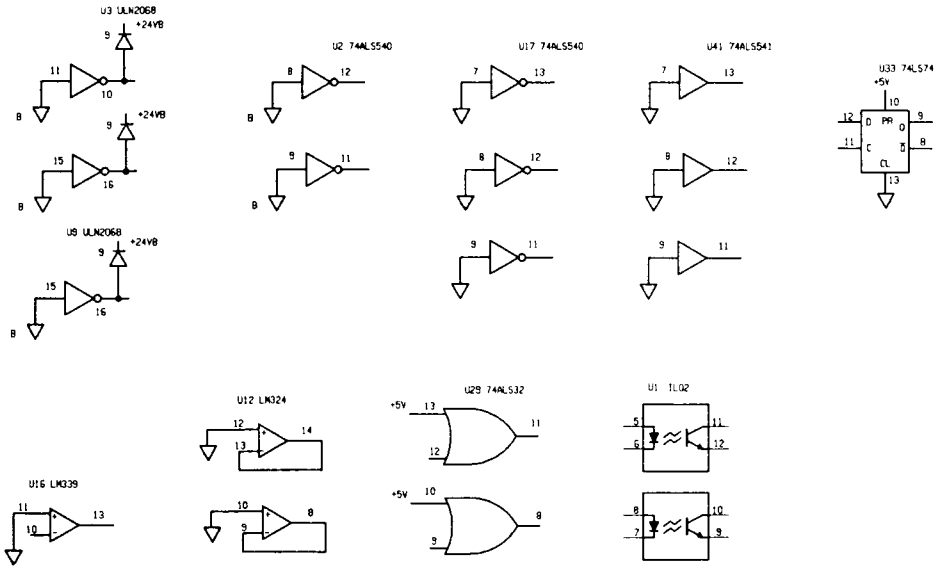

UNUSED RESISTOR SECTIONS

U7-2,3,4,6,7,10,11,13,14
U39-9,10,11,12,13,14,15
U6-1,6,7,8,9,12,13,14,15,
U8-1,2,3,6,10,11,12,13,14,15
U35-4,6,7,15

TEST POINTS

TP1 TP2	GNDB +5VB
TP3 TP4	+24VB +5V
TP5 TP6	GND +12V
TP7 TP8	ADC CH1 -12V
TP9 TP10	RCVR_REFL_COL DONOR_MOTION_COL
TP11 TP12	LCD_INTENSITY ADC VREF
TP13 TP14	ADC CH2 ADC CH3
TP15	ADC CH4

Figure 5A
I/O BOARD Schemat
Style 2
Model 7700

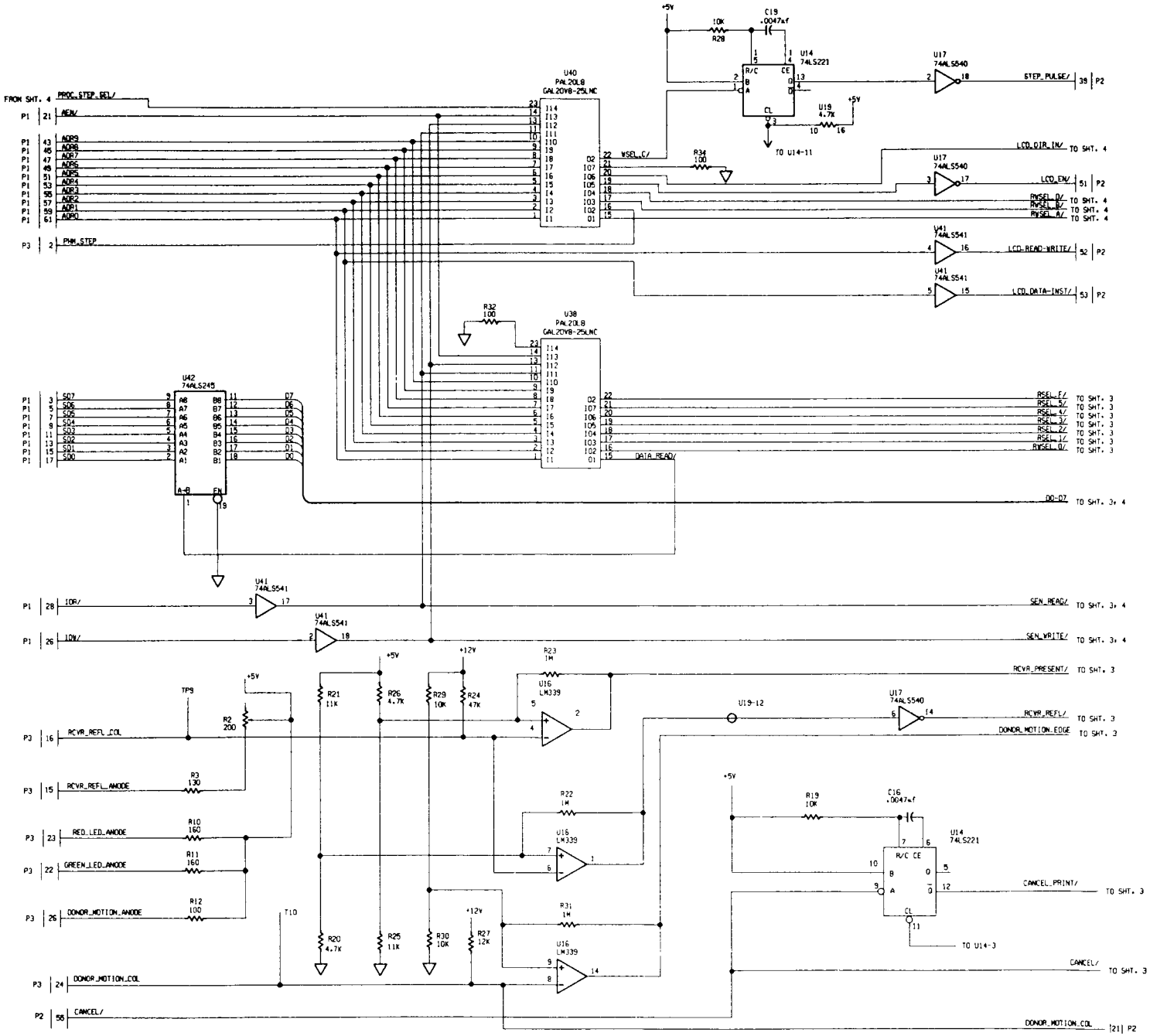

Figure 5B
I/O BOARD Schemat
Style 2
Model 7700

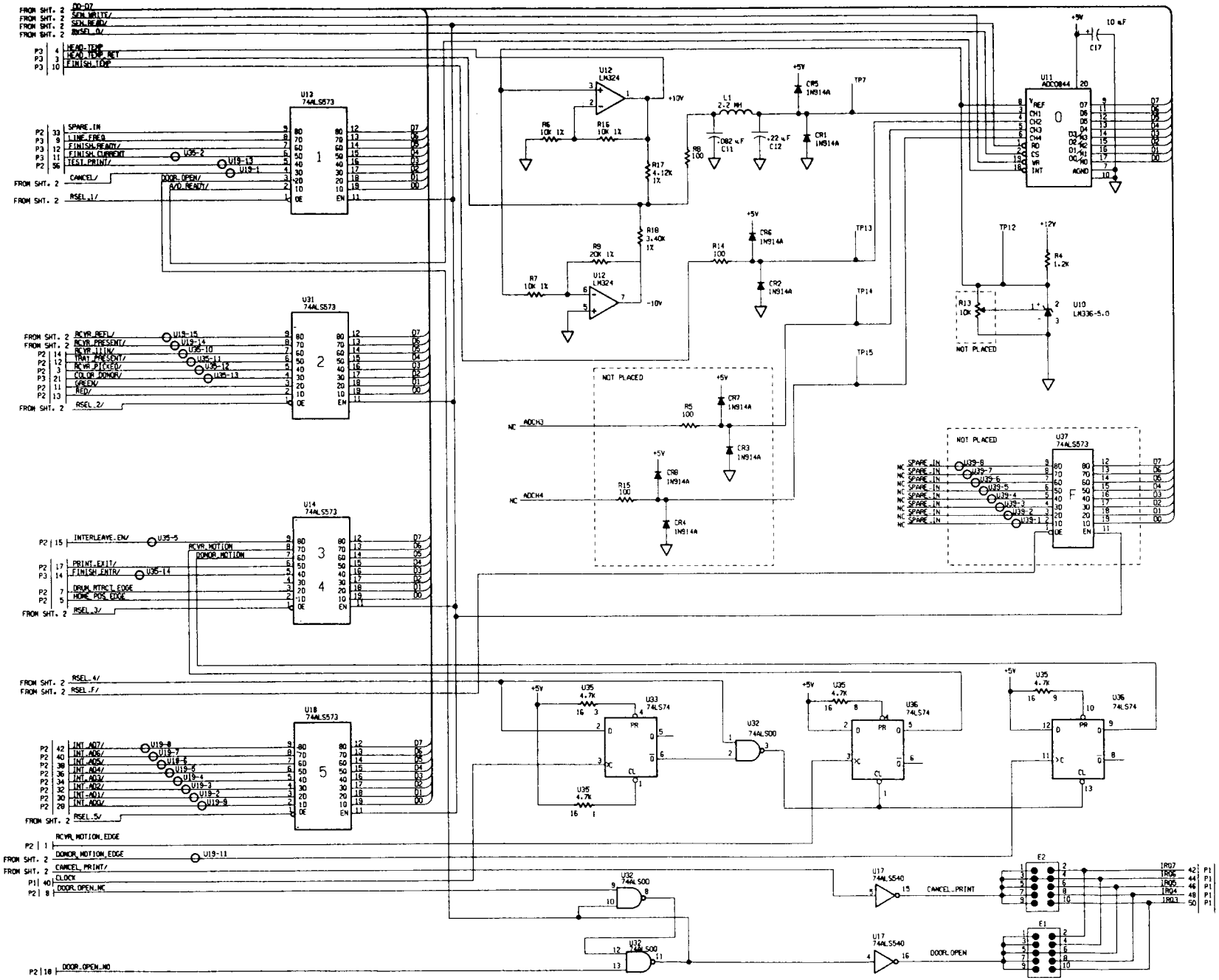

Figure 5C
I/O BOARD Schema
Style 2
Model 7700

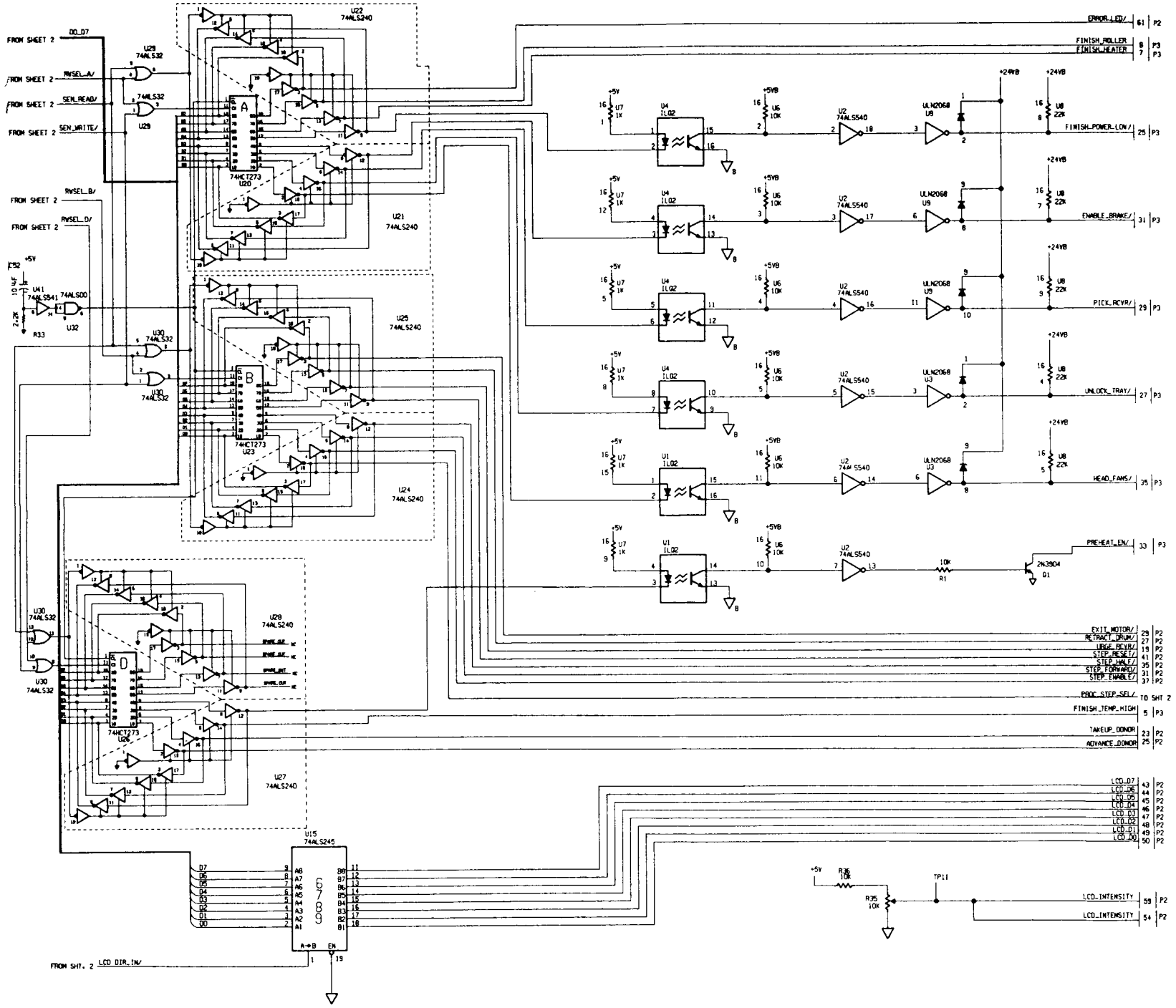

Figure 5D
I/O BOARD Schemat
Style 2
Model 7700

Item	Part no	Description	Quantity	
1	744558	SCHEMATIC	0	
2	783572	BOARD,PC(I/O)	1	
3	122719	SCREW	2	
4	251460	SHUNT,2 PIN	2	
5	546519	SOCKET,16 PIN	2	XU3 XU9
6	252685	SOCKET,24 PIN	2	XU38 XU40
7	363406	SOCKET,20 PIN	1	XU2
8	258287	PROGRAM (744561) U38	0	
9	258288	PROGRAM (744561) U40	0	
10	220034	RESISTOR,47K,1/4W,5%	2	R24 R33
11	220035	RESISTOR,4.7K,1/4W,5%	2	R20 R26
12	220053	RESISTOR,1.0 M,1/4W,5%,CARBON FILM	3	R22 R23 R31
13	220054	RESISTOR,10K,1/4W,5%	6	R1 R19 R28 R29 R30 R36
14	220056	RESISTOR,1.2K,1/4W,5%	1	R4
15	229490	RESISTOR,100 OHM,1/4W,5%	5	R8 R14 R32 R34 R12
16	231383	HEADER,UNSHROUDED 10 POSITION	2	E1 E2
17	231478	RESISTOR,11K,1/4W,5%	2	R21 R25
18	233418	RESISTOR,130 OHM,1/4W,5%	1	R3
19	238107	RESISTOR,20K 1/4W 1%,METAL FILM	1	R9
20	241326	RESISTOR,10K 1/4W 1%,METAL FILM	3	R6 R7 R16
21	241424	IC,QUAD,OPTOISOLATOR,ILQ2	2	U1 U4
22	251383	POTENTIOMETER,10K,SINGLE TURN	1	R35
23	251410	IC,A/D CONVERTOR,ADC0844CCN	1	U11
24	253387	RESISTOR,150 OHMS,1/4W,5%	2	R10 R11
25	253398	RESISTOR,4.12K,1/4W,1%,MF	1	R17
26	257017	BRACKET,METAL	1	
27	257427	RESISTOR,3.40K,1/4W,1%,MF	1	R18
28	258275	POTENTIOMETER,200 OHM SINGLE TURN	1	R2
29	258367	CAPACITOR,.1uF,50V,20%	38	C1 C2 C3 C4 C5 C6 C9 C10 C14 C15 C18 C20 C21 C22 C23 C25 C26 C27 C28 C29 C30 C31 C32 C33 C34 C35 C37 C38 C40 C41 C42 C45 C46 C47 C49 C51 C53 C54
30	259947	INDUCTOR,2200uH,10%	1	L1
31	263006	IC,SN74ALS00N	1	U32
32	337522	CAPACITOR,.082uF,50V,10%	1	C11
33	375339	IC,74HCT273N	3	U20 U23 U26
34	375401	IC,ULN2068B	2	U3 U6
35	375418	IC,74ALS240N	6	U21 U22 U24 U25 U27 U28
36	375419	IC,SN74ALS245N	2	U15 U42
37	375459	IC,74ALS941N	1	U41
38	252337	CAPACITOR,10.0uF 16V 20%	7	C17 C24 C36 C39 C43 C44 C52
39	252314	CAPACITOR,1.0uF 50V 20%	2	C7 C8
40	477966	IC,CLOCK MULTIVIBRATOR,74LS221N	1	U14
41	480043	RESISTOR NETWORK,10K	1	U5
42	486167	RESISTOR NETWORK 4.7K	2	U19 U35
43	486275	CAPACITOR,.0047uF,50V,5%	2	C16 C19
44	486324	RESISTOR NETWORK,1K	1	U7
45	492838	RESISTOR NETWORK 22K	1	U8
46	498684	CAPACITOR,.220uF,50V,10%	1	C12
47	522081	TRANSISTOR 2N3904RV TO-92	1	Q1
48	523889	DIODE,SIGNAL,1N914	4	CR1 CR2 CR5 CR6
49	541858	IC,VOLTAGE COMPARATOR,LM339N	1	U16
50	549660	VOLTAGE REGULATOR,5V,7805	1	U5
51	565979	IC,LINEAR OP-AMP,LM324N	1	U12
52	595052	IC,BINARY FLIP FLOP,74LS74	2	U33 U36
53	613523	IC,74ALS573	4	U13 U18 U31 U34
54	616226	IC 74ALS32N	2	U29 U30
55	659578	IC,LOGIC BUFFER DRIVER,74ALS540N	2	U2 U17
56	744561	IC,PAL20L8A-2	2	U38 U40
57	744694	LM336BZ,5V REFERENCE DIODE	1	U10
58	486168	CAPACITOR,22uF,100V,20%	1	C13
59	795638	TEST PIN .025 POST GOLD PLATED 976	13	TP1 TP2 TP3 TP4 TP5 TP6 TP7 TP8 TP9 TP10 TP11 TP12 TP13
60	220038	RESISTOR,12K,1/4W,5%	1	R27

NOTES: (1) 251460 SHUNT ASSY TO BE PLACED E1 PINS 5-6,E2 PINS 3-4
(2) U5 TO BE "AD" FORMED
(3) DO NOT PLACE C48,C50,TP14,TP15,R5,R13,R15,CR3,CR4,CR7,CR8,U37,U39

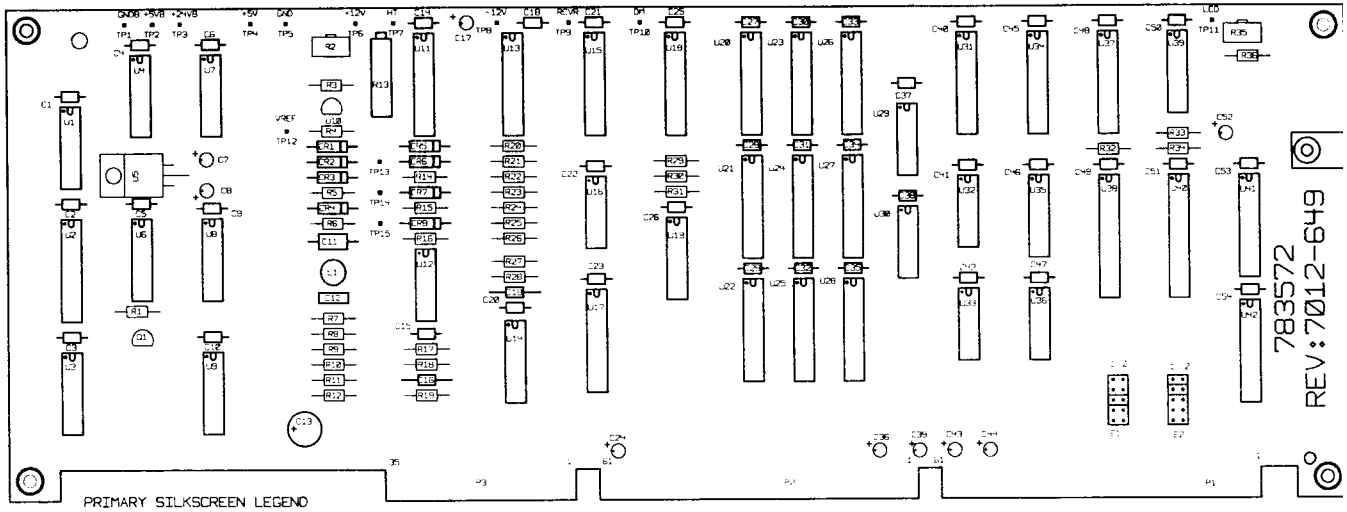

PRIMARY SILKSCREEN LEGEND

Figure 5E
I/O BOARD Componer
Style 2
Model 7700

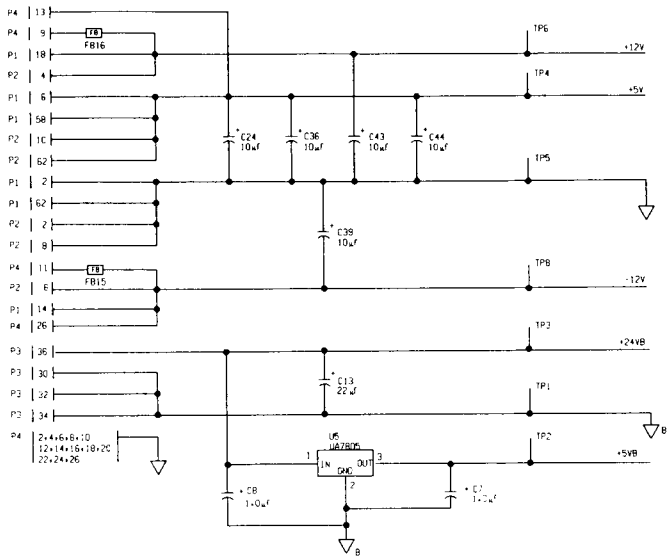

POWER TABLE

DESIG.	PART NO.	+5V	+12V	-12V	GND	+5VB	+24VB	GNDB	BYPASS CAPACITORS
U1 U2	ILQ2 74ALS540					 20		13,16 1,8,9,10,19	C1 C2
U3 U4	ULN2068 ILQ2					14	1,9	4,5,12,13 9,12,13,16	C3 C4
U5 U6	uA7805 10K					3 16	1	2	C7,C8 C5
U7 U8	1K 22K	16					 16		C6 C9
U9 U10	ULN2068 LM336-5.0				 3	14	1,9	4,5,12,13	C10
U11 U12	ADC0844 LM324	20	 4	 11	7,10 5,10,12				C14,C17 C15
U13 U14	74ALS573 74LS221	20 16			10 8				C18 C20
U15 U16	74ALS245 LM339	20	 3		10,19 11,12				C21 C22
U17 U18	74ALS540 74ALS573	20 20			1,7,8,9,10,19 10				C23 C25
U19 U20	4.7K 74HCT273	16 20			 10				C26 C27
U21 U22	74ALS240 74ALS240	20 20			1,10 19,10				C28 C29
U23 U24	74HCT273 74ALS240	20 20			10 1,10				C30 C31
U25 U26	74ALS240 74HCT273	20 20			19,10 10				C32 C33
U27 U28	74ALS240 74ALS240	20 20			1,10 19,10				C34 C35
U29 U30	74LS32 74LS32	10,13,14 14			7 7				C37 C38
U31 U32	74ALS573 74ALS00	20 14			10 7				C40 C41
U33 U34	74LS74 74ALS573	10,14 20			7,13 10				C42 C45
U35 U36	4.7K 74LS74	16 14			 7				C46 C47
U37 U38	74ALS573 PAL20L8	20 24			10 12				C48 C49
U39 U40	4.7K PAL20L8	16 24			 12				C50 C51
U41 U42	74ALS541 74ALS245	20 20			 1,7,8,9,10,19				C53 C54
U43	LM339		3		12				C55

UNUSED RESISTOR SECTIONS

U7-2,3,4,6,7,10,11,13,14

U39-9,10,11,12,13,14,15

U6-1,6,7,8,9,12,13,14,15,

U8-1,2,3,6,10,11,12,13,14,15

U35-4,6,7,15

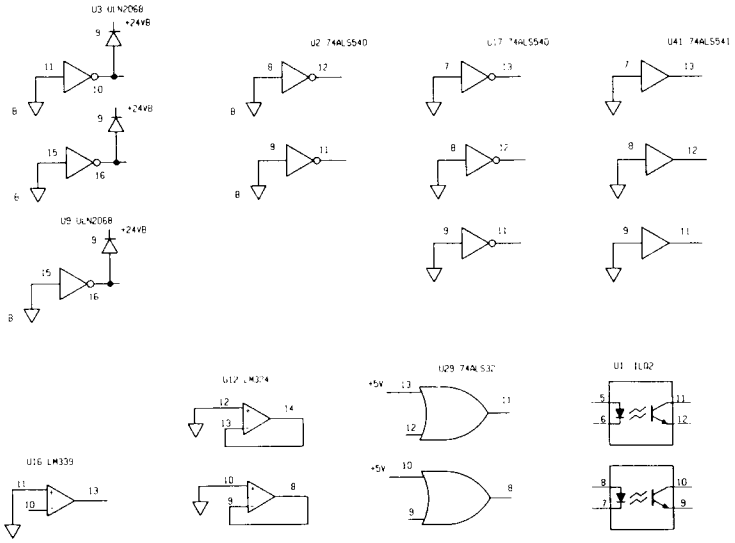

TEST POINTS

TP1	GNDB
TP2	+5VB
TP3	+24VB
TP4	+5V
TP5	GND
TP6	+12V
TP7	HT0
TP8	-12V
TP9	REVR REFL COL
TP10	DONOR MOTION COL
TP11	LCD INTENSITY
TP12	ADC VREF
TP13	FINISHER
TP14	HT2

Figure 5F
I/O BOARD Schemat
Style 3
Models 7700 and 77

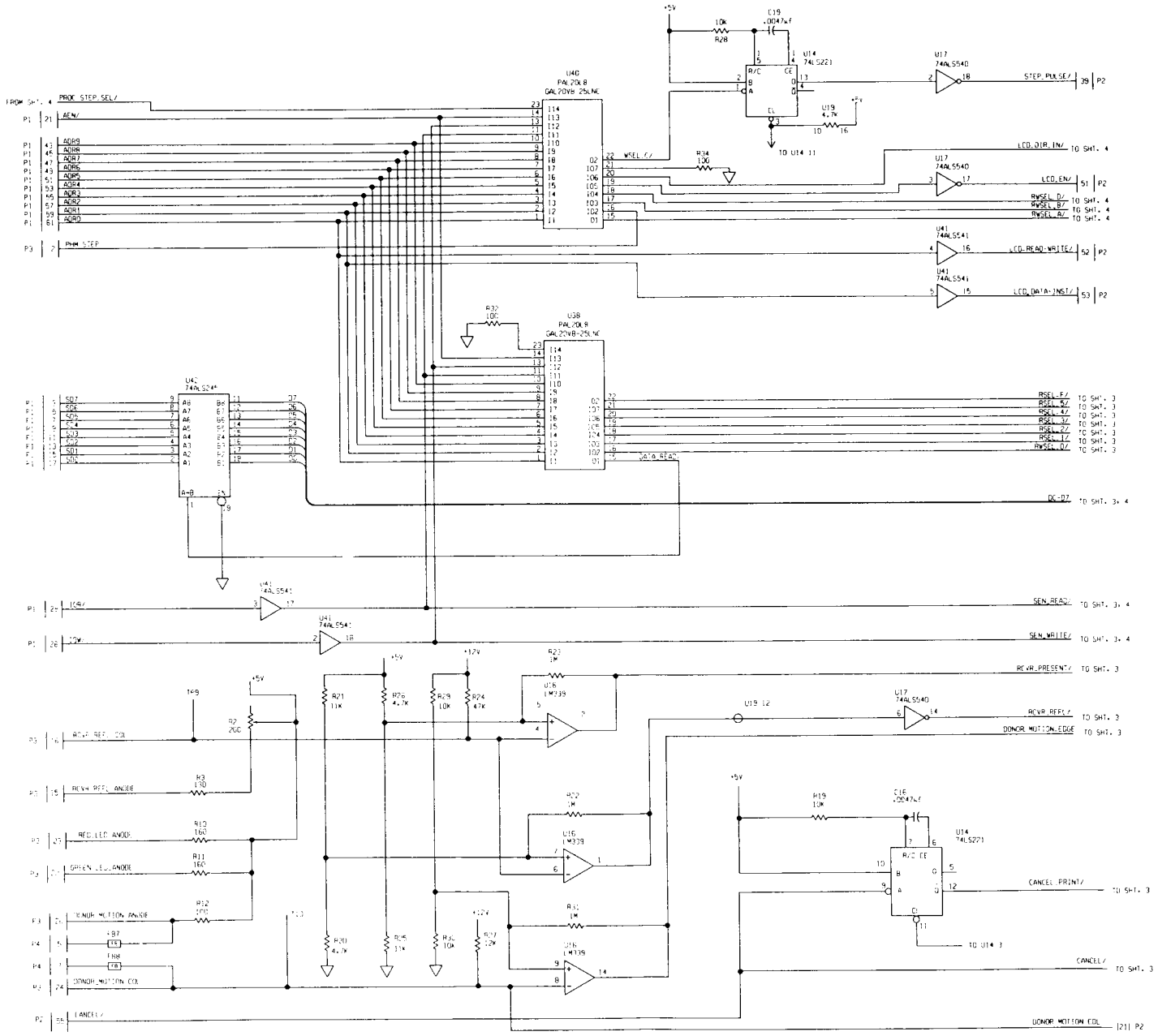

Figure 5G
I/O BOARD Schemati
Style 3
Models 7700 and 772

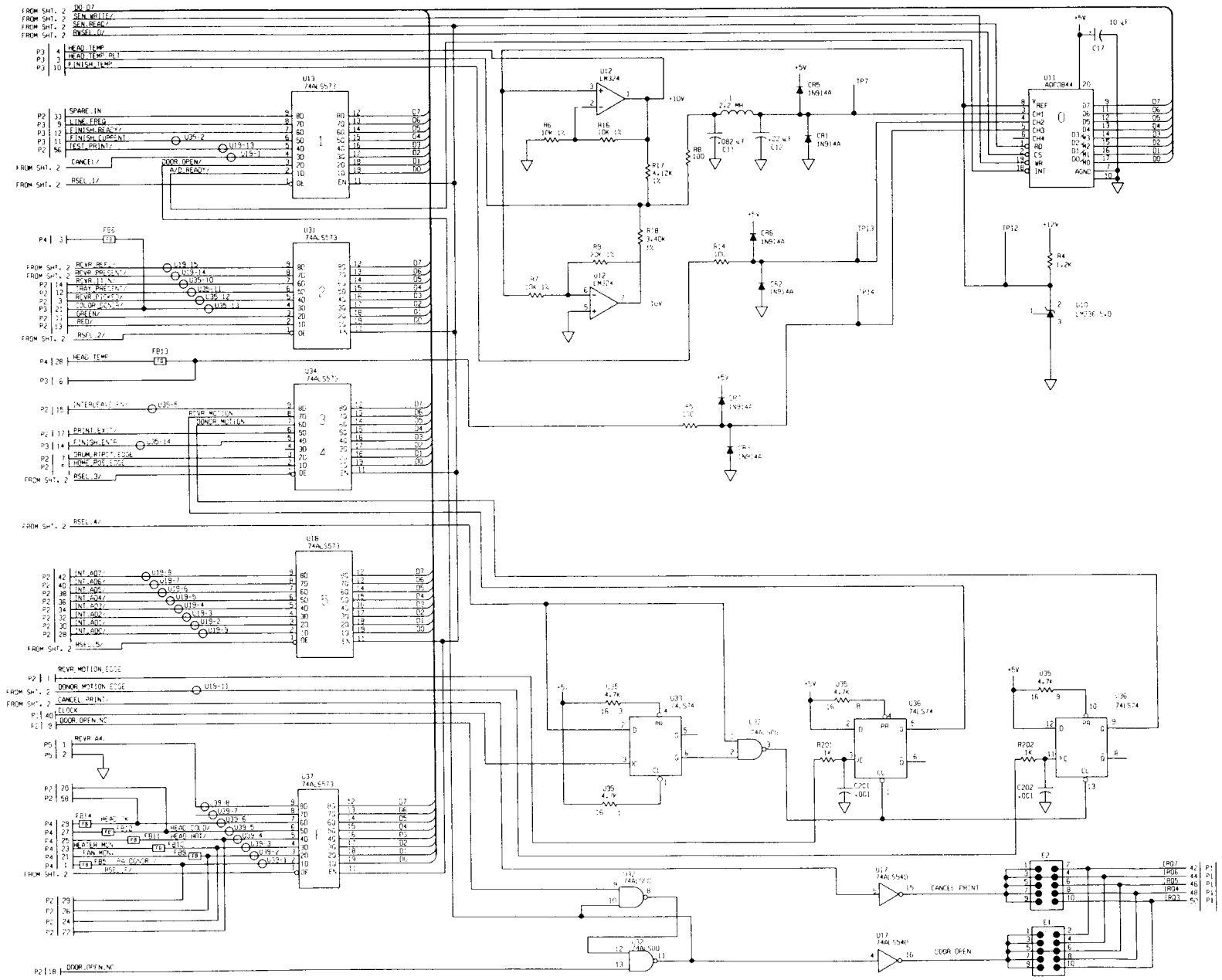

Figure 5H
I/O BOARD Schematic
Style 3
Models 7700 and 7720

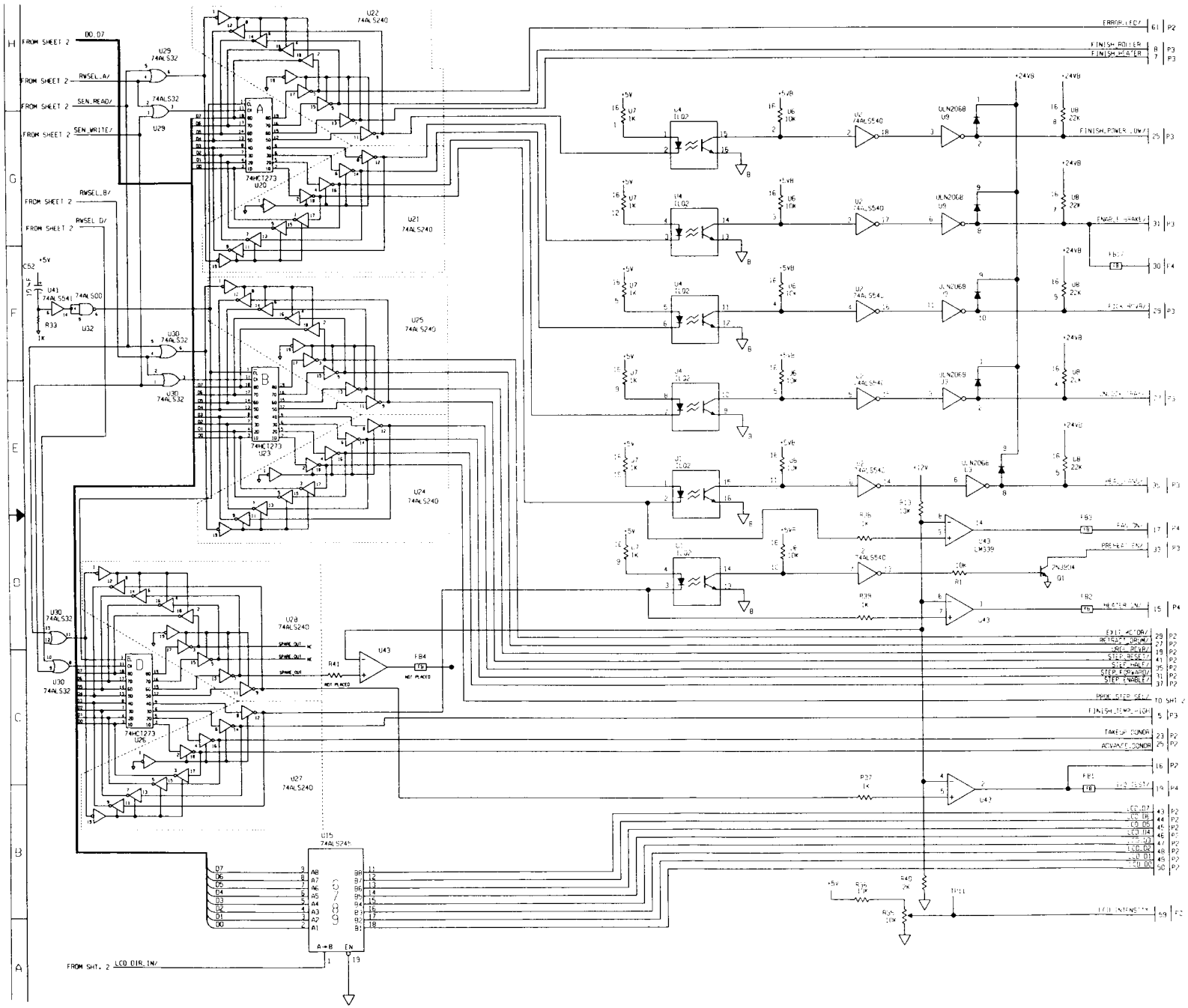

Figure 5I
I/O BOARD Schemati
Style 3
Models 7700 and 772

Item	Part no	Description	Quantity	
1	941242	SCHEMATIC	0	
2	941243	BOARD,PC(I/O)	1	
3	122719	SCREW	2	
4	251460	SHUNT,2 PIN	2	
5	940519	SOCKET,16 PIN	2	XU3 XU8
6	252685	SOCKET,24 PIN	2	XU38 XU40
7	363406	SOCKET,20 PIN	1	XU2
8	258297	PROGRAM (74H561) U38	0	
9	258298	PROGRAM (74H561) U40	0	
10	220034	RESISTOR,47K,1/4W,5%	1	R24
11	220035	RESISTOR,4.7K,1/4W,5%	2	R20 R26
12	220036	RESISTOR 12K 1/4W 5% C.F.	1	R27
13	220044	RESISTOR,1K,1/4W,5%	7	R33 R37 R38 R39 R41 R201 R202
14	220053	RESISTOR,1.0 M,1/4W,5%,CARBON FILM	3	R22 R23 R31
15	220054	RESISTOR,10K,1/4W,5%	7	R1 R13 R19 R28 R29 R30 R36
16	220058	RESISTOR,2K 1/4W 5% CARBON FILM	1	R40
17	220066	RESISTOR,1.2K,1/4W,5%	1	R4
18	223490	RESISTOR,100 OHM,1/4W,5%	6	R5 R8 R12 R14 R32 R34
19	231303	HEADER,UNSHROUDED 10 POSITION	2	E1 E2
20	231470	RESISTOR,11K,1/4W,5%	2	R21 R25
21	233418	RESISTOR,130 OHM,1/4W,5%	1	R3
22	238107	RESISTOR,20K 1/4W 1%,METAL FILM	1	R9
23	241305	RESISTOR,10K 1/4W 1%,METAL FILM	3	R6 R7 R16
24	241424	IC,QUAD,OPTOISOLATOR,IL02	2	U1 U4
25	241470	HEADER SHROUDED POLARIZED 2 POS	1	P5
26	251393	POTENTIOMETER,10K,SINGLE TURN	1	R35
27	251410	IC,A/D CONVERTOR,ADC0844CCN	1	U11
28	252314	CAPACITOR,ELECTROLYTIC,1uF,50V,20%	2	C7 C8
29	252337	CAPACITOR,10uF,16V,20%	7	C17 C24 C36 C39 C43 C44 C52
30	253387	RESISTOR,160 OHMS,1/4W,5%	2	R10 R11
31	253398	RESISTOR,4.12K,1/4W,1%,MF	1	R17
32	257317	BRACKET,METAL	1	N7
33	257343	CONNECTOR,AMPLATCH 30 POS RIGHT	1	P4
34	257427	RESISTOR,3.40K,1/4W,1%,MF	1	R18
35	258275	POTENTIOMETER,200 OHM SINGLE TURN	1	R2
36	258367	CAPACITOR,.1uF,50V,20%	41	C1 C2 C3 C4 C5 C6 C9 C10 C14 C15 C18 C20 C21 C22 C23 C25 C26 C27 C28 C29 C30 C31 C32 C33 C34 C35 C37 C38 C40 C41 C42 C45 C46 C47 C48 C49 C50 C51 C53 C54 C55
37	259947	INDUCTOR,2200uH,10%	1	L1
38	263086	IC,SN74ALS00N	1	U32
39	337307	SHIELD BEAD,FERRITE	17	FB1 FB2 FB3 FB4 FB5 FB6 FB7 FB8 FB9 FB10 FB11 FB12 FB13 FB14 FB15 FB16 FB17
40	337522	CAPACITOR,.082uF,50V,10%	1	C11
41	375399	IC,74HCT273N	3	U20 U23 U26
42	375401	IC,ULN2068B	2	U3 U9
43	375418	IC,74ALS240N	6	U21 U22 U24 U25 U27 U28
44	375419	IC,SN74ALS245N	2	U15 U42
45	375459	IC,74ALS541N	1	U41
46	477966	IC,CLOCK MULTIVIBRATOR,74LS221N	1	U14
47	480043	RESISTOR NETWORK,10K	1	U6
48	486167	RESISTOR NETWORK 4.7K	3	U19 U35 U39
49	486168	CAPACITOR,22uF,100V,20%	1	C13
50	486275	CAPACITOR,.0047uF,50V,5%	2	C16 C19
51	486324	RESISTOR NETWORK,1K	1	U7
52	492838	RESISTOR NETWORK 22K	1	U8
53	498684	CAPACITOR,.220uF,50V,10%	1	C12
54	522981	TRANSISTOR 2N3904RV TO-92	1	Q1
55	523638	DIODE,SIGNAL,1N914	6	CR1 CR2 CR3 CR5 CR6 CR7
56	541858	IC,VOLTAGE COMPARATOR,LM339N	2	U16 U43
57	549660	VOLTAGE REGULATOR,5V,7805	1	U5
58	565879	IC,LINEAR OP-AMP,LM324N	1	U12
59	595052	IC,BINARY FLIP FLOP,74LS74	2	U33 U36
60	613523	IC,74ALS573	5	U13 U18 U31 U34 U37
61	616226	IC 74ALS32N	2	U29 U30
62	659578	IC,LOGIC BUFFER DRIVER,74ALS540N	2	U2 U17
63	744561	IC,PAL20L8A-2	2	U38 U40
64	744694	LM336BZ,5V REFERENCE DIODE	1	U10
65	795638	TEST PIN .025 POST GOLD PLATED 876	14	TP1 TP2 TP3 TP4 TP5 TP6 TP7 TP8 TP9 TP10 TP11 TP12 TP13 TP14
66	337440	CAPACITOR,.001uF,100V,20%	2	C201 C202
67	616392	LATCH	2	XP4

NOTES: (1) 251460 SHUNT ASSY TO BE PLACED E1 PINS 5-6,E2 PINS 3-4
(2) U5 TO BE 'AD' FORMED

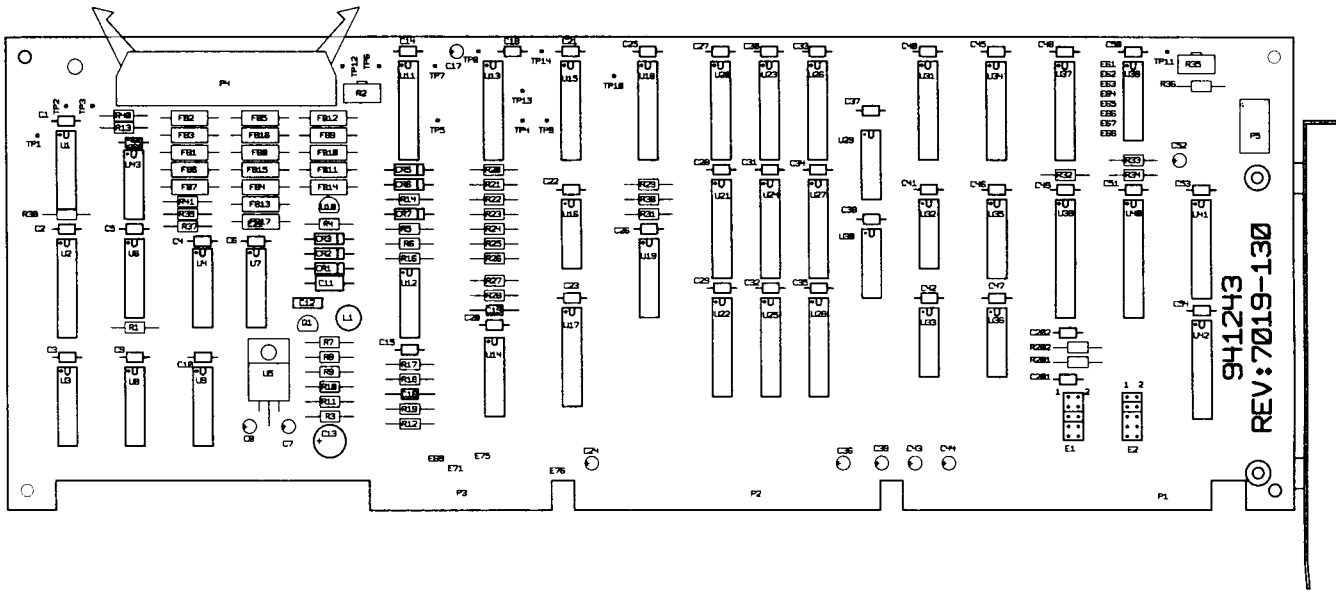

Figure 5J
I/O BOARD Componer
Style 3
Models 7700 and 772(

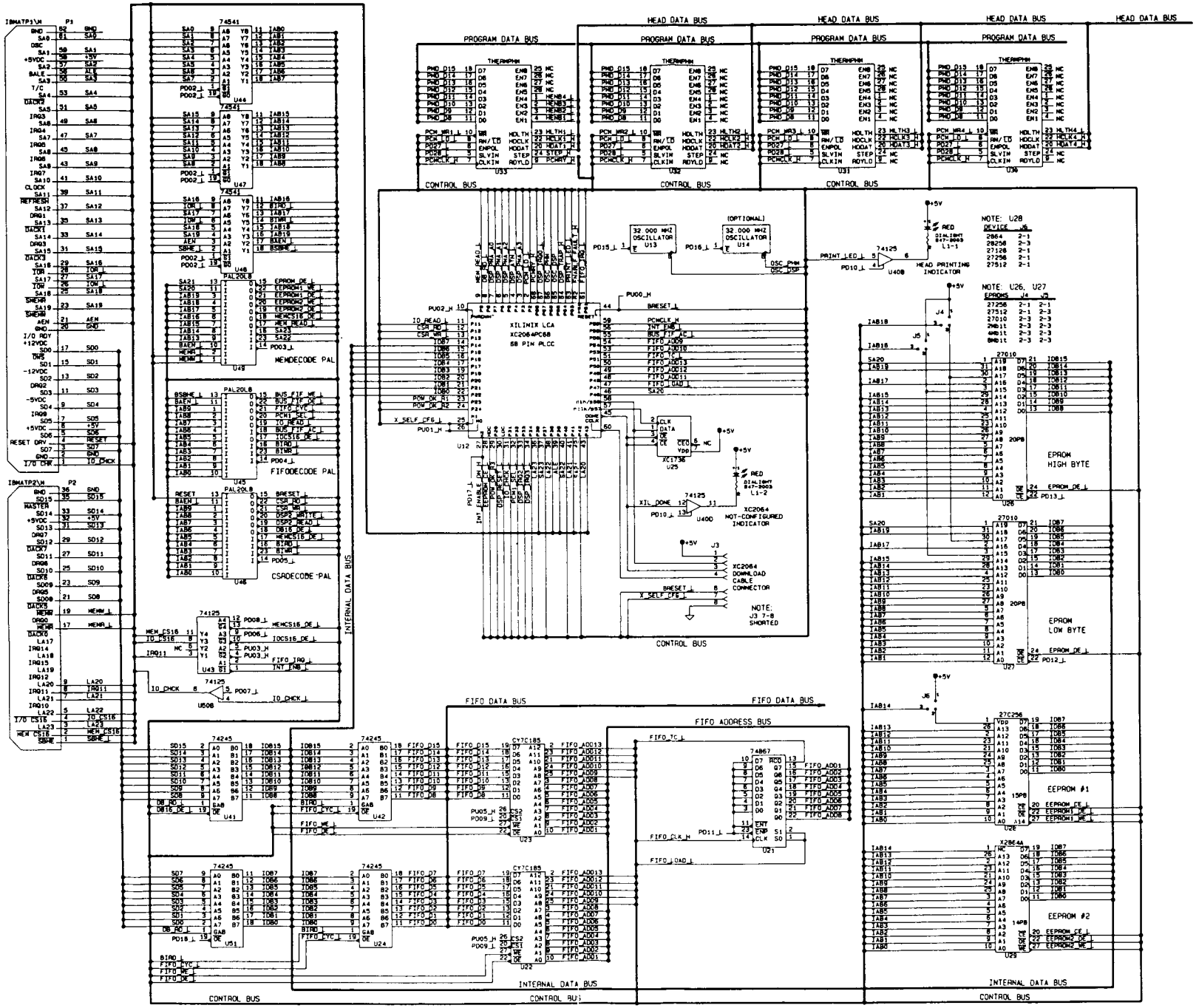

Figure 6
DSP BOARD Sc
Models 7700 an

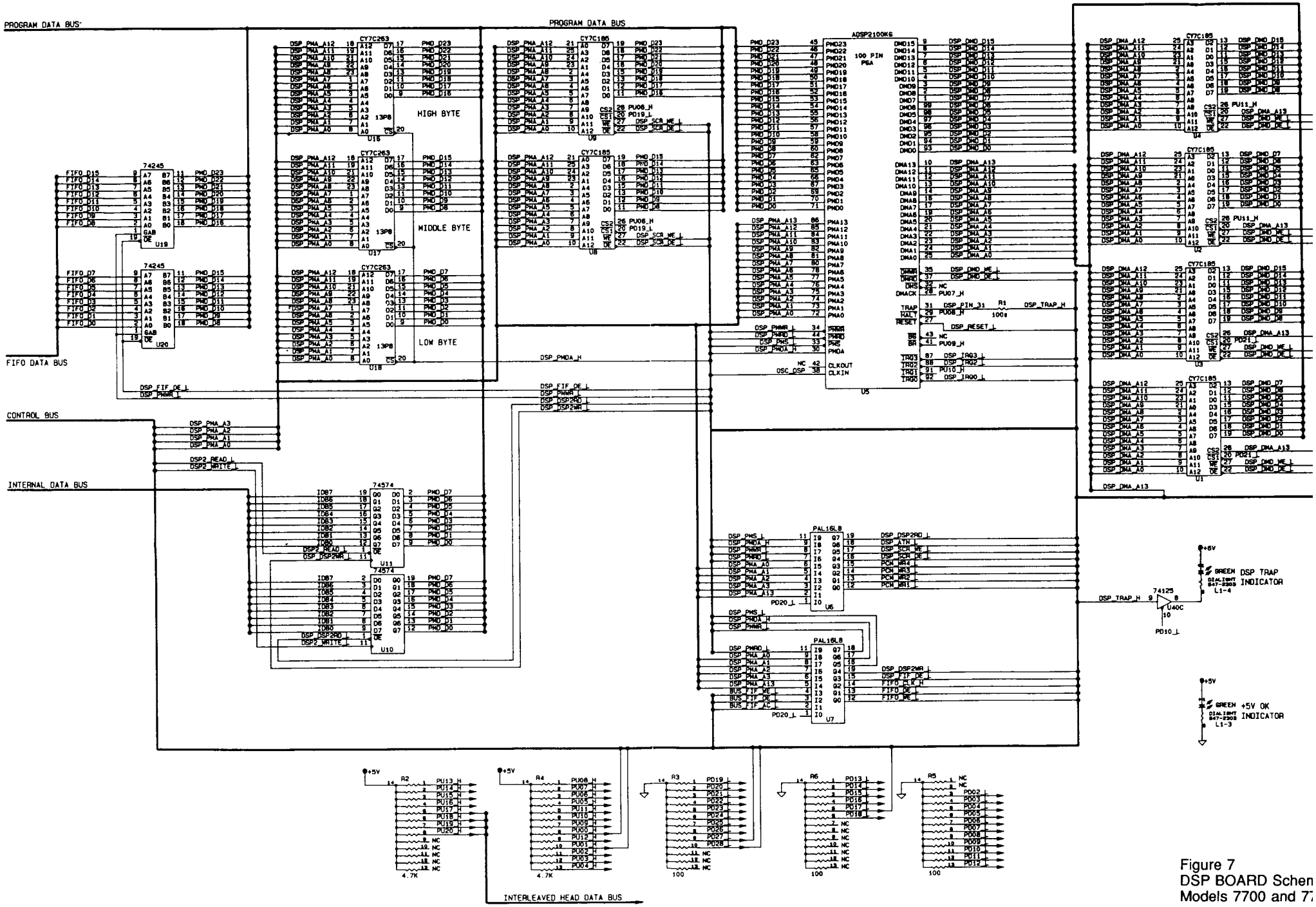

Figure 7
DSP BOARD Schen
Models 7700 and 7

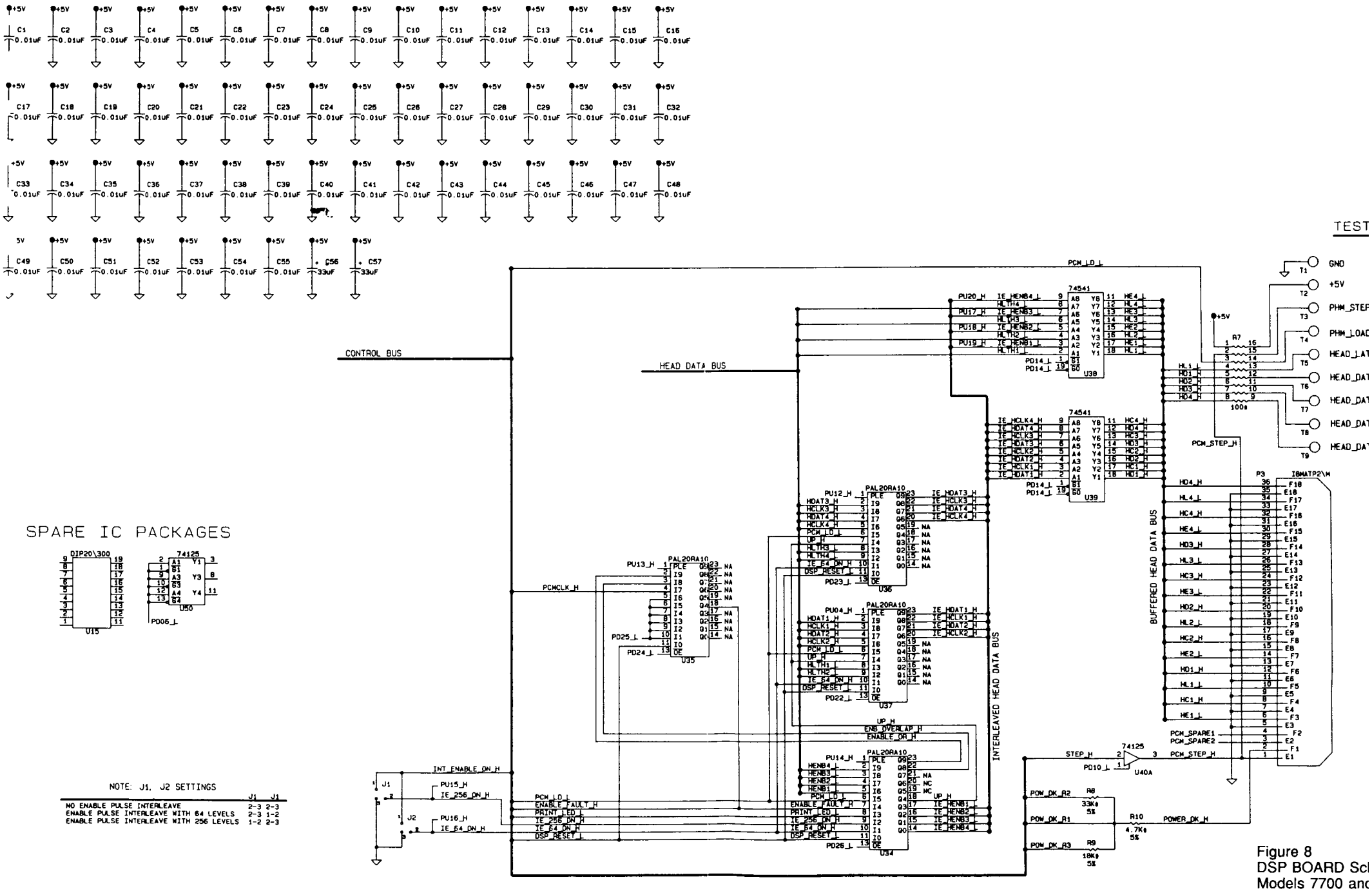

Figure 8
DSP BOARD Sc
Models 7700 an

NOTES:

SHUNT ASSY 744586 TO BE PLACED AS FOLLOWS:

J1 2-3
J2 1-2
J3 7-8
J4 2-3
J5 2-3
J6 2-3

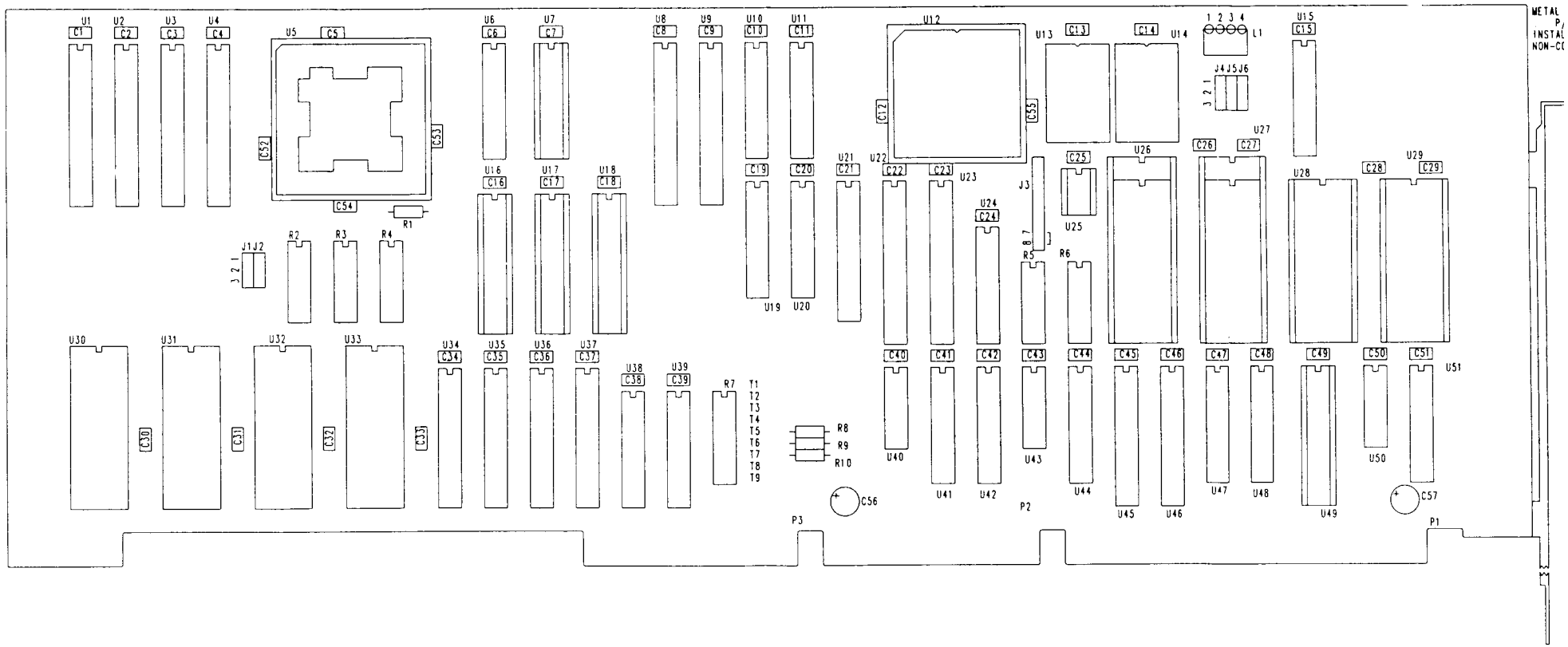

Figure 9
DSP BOARD Compor
Models 7700 and 772

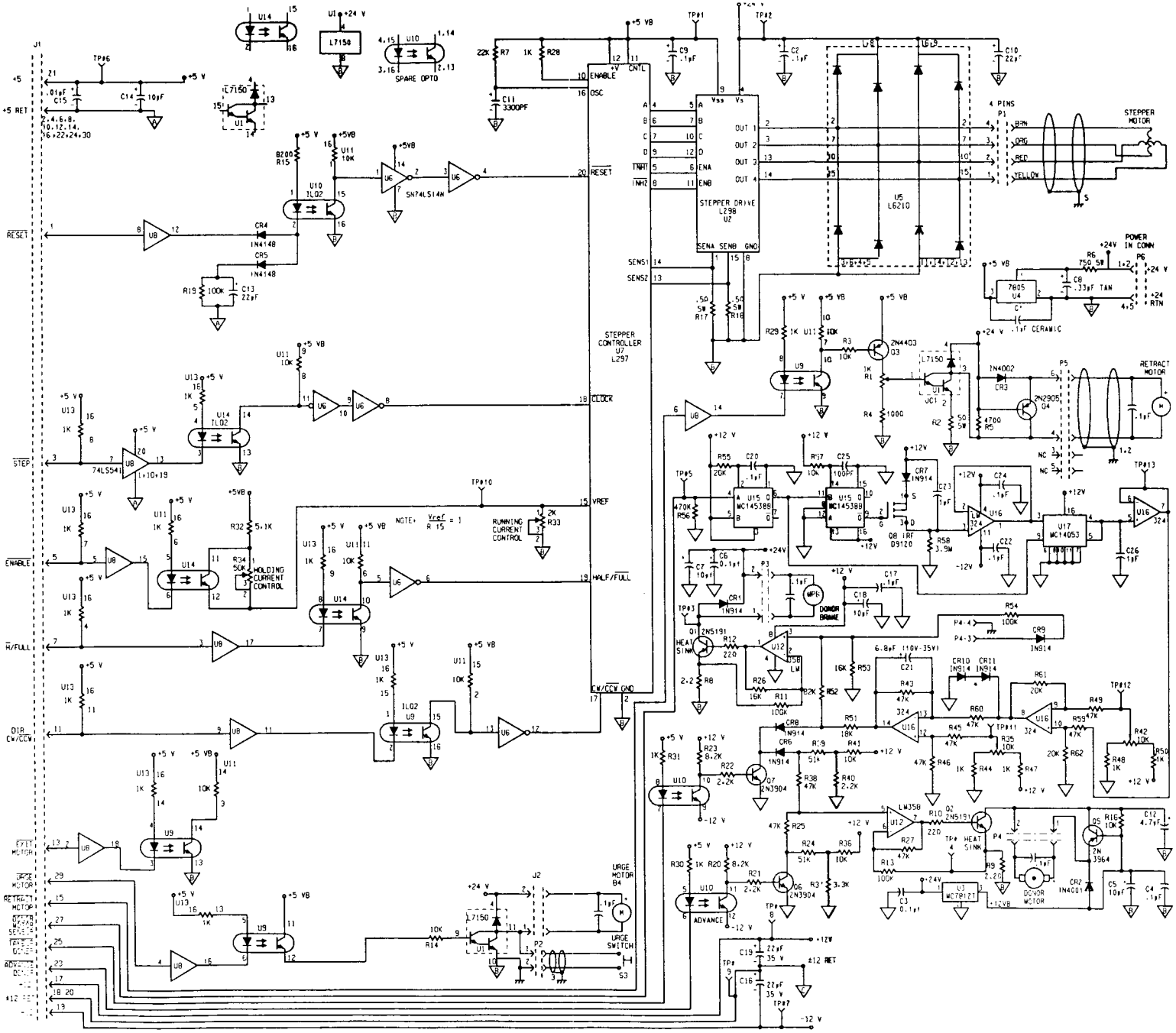
STEPPER DRIVE
L298
U2
STEPPER CONTROLLER
U7
L297
U5
L6210
STEPPER MOTOR
RETRACT MOTOR
POWER IN CONN
P6
4 PINS
P1
BRN
ORG
RED
YELLOW
RESET
STEP
ENABLE
H/FULL
DIR CW/CCW
EXIT MOTOR
URGE MOTOR
RETRACT MOTOR
DOVOR MOTOR
ADVANCE
URGE SWITCH
HOLDING CURRENT CONTROL
RUNNING CURRENT CONTROL
SPARE OPTO
HEAT SINK
DONOR BRAKE
DOVOR MOTOR
ADVANCE
CLOCK
VREF
HALF/FULL
CW/CCW GND
ENABLE
OSC
CNTL
RESET
SENS1
SENS2
OUT 1
OUT 2
OUT 3
OUT 4
SENA SENB GND
+5 VB
+24 V
+12 V
-12 V
+12 RET
+5 RET
+5 V
TP#1
TP#2
TP#3
TP#5
TP#6
TP#7
TP#8
TP#9
TP#10
TP#11
TP#12
TP#13
J1
J2
P2
P3
P4
P5
P6
S3
U1
U2
U3
U4
U5
U6
U7
U8
U9
U10
U11
U12
U13
U14
U15
U16
U17
Q1
Q2
Q3
Q4
Q5
Q6
Q7
Q8
CR1
CR2
CR3
CR4
CR5
CR6
CR7
CR8
CR10
CR11
R1
R2
R3
R4
R5
R6
R7
R8
R9
R10
R11
R12
R13
R14
R15
R16
R17
R18
R19
R20
R21
R22
R23
R24
R25
R26
R27
R28
R29
R30
R31
R32
R33
R34
R35
R36
R37
R38
R39
R40
R41
R42
R43
R44
R45
R46
R47
R48
R49
R50
R51
R52
R53
R54
R55
R56
R57
R58
R59
R60
R61
R62
C1
C2
C3
C4
C5
C6
C7
C8
C9
C10
C11
C12
C13
C14
C15
C16
C17
C18
C19
C20
C21
C22
C23
C24
C25
C26
C27
C28
C29
C30
C31
C32
C33
C34
C35
C36
C37
C38
C39
C40

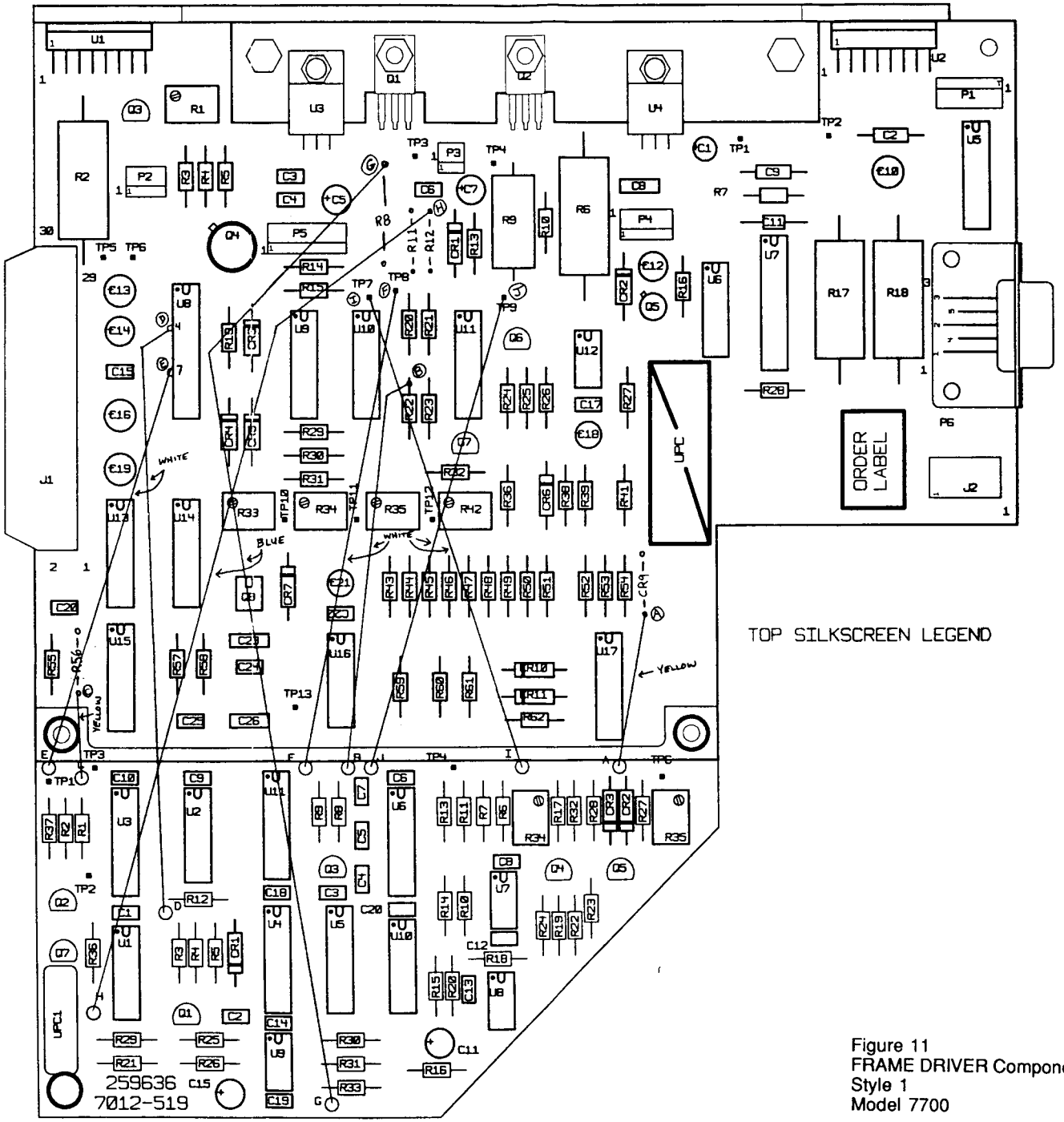

Figure 11
FRAME DRIVER Componei
Style 1
Model 7700

NOTES:

(1) U1,U2,Q1,Q2 TO BE "AH" FORM
(2) LATCHING POSTS(744608)TO BE ASSEMBLED AS FOLLOWS: POST THROUGH 1 LOCKWASHER,THEN 1 FLATWASHER,THEN THROUGH CONNECTOR BODY AND SCREWED INTO RIGHT ANGLE BRACKET OR STANDOFF.DO NOT TIGHTEN UNTIL AFTER CONNECTOR IS INSTALLED ONTO BOARD,BUT PRIOR TO SOLDER.
(3) W2 NOT USED.
(4) INSERT SCREW INTO HEATSINK FIRST,THEN INTO DEVICE (U1 & U2).

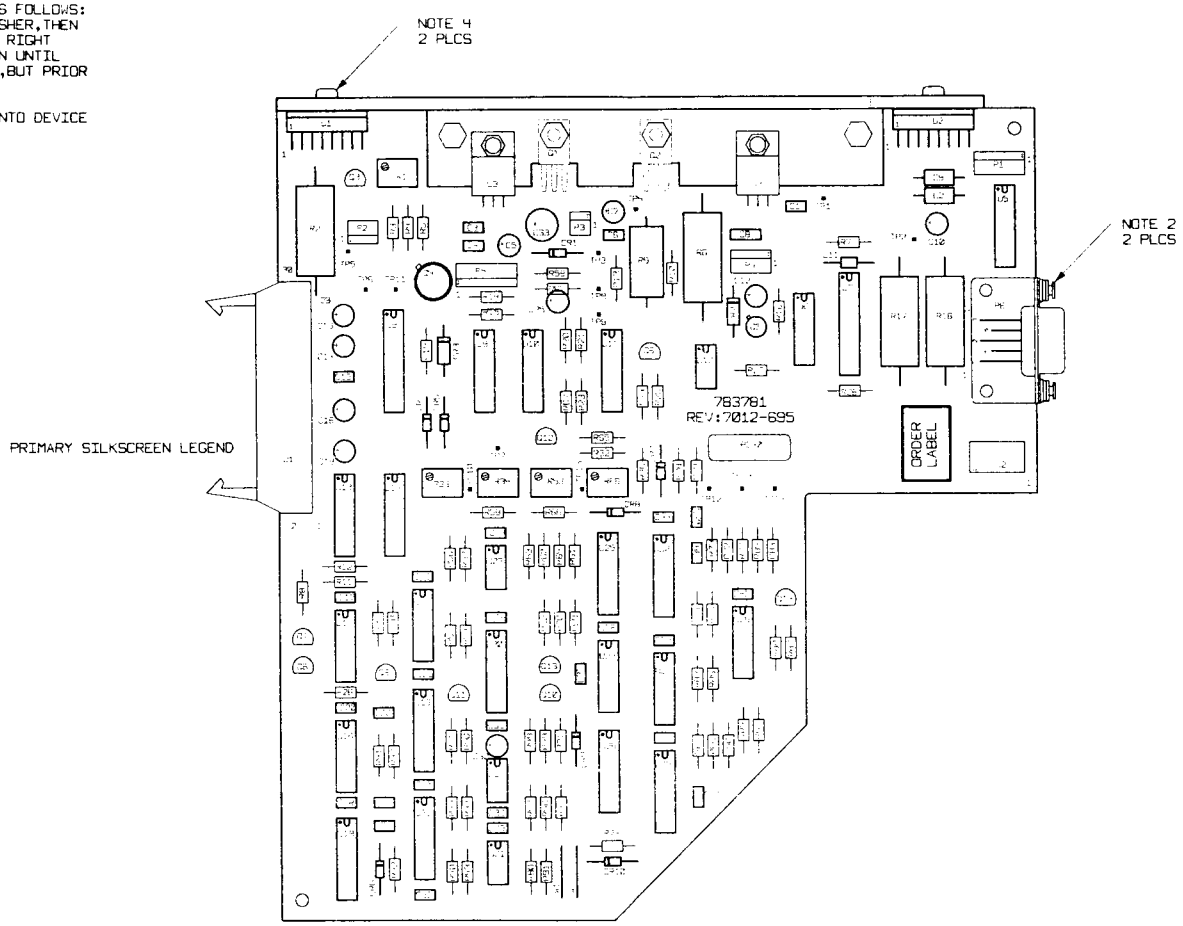

Figure 11A
FRAME DRIVER Componen
Style 2
Models 7700 and 7720

Item	Code no	Description	Quantity	
1	783780	SCHEMATIC,FRAME DRIVER	0	
2	783781	BOARD-PRINTED CIRCUIT,FRAME DRIVER	1	
3	616392	LATCH,LONG	2	XJ1
4	744603	STUD	8	XH1 XP6 XU3 XU4 XQ1 XQ2
5	179713	NUT,SMALL	10	XH1 XP6 XU1 XU2 XU3 XU4 XQ1 XQ2
6	128531	FLATWASHER	10	XH1 XP6 XU1 XU2 XU3 XU4 XQ1 XQ2
7	105420	LOCKWASHER	10	XH1 XP6 XU1 XU2 XU3 XU4 XQ1 XQ2
8	744608	LATCHING POST	2	XP6
9	717786	PAD-MULTIWATT	2	XU1 XU2
10	122666	SCREW,4-40	2	XU1 XU2
11	241420	PAD,TO-126	4	XU3 XU4 XQ1 XQ2
12	485986	SHOULDER WASHER	2	XU1 XU2
13	175837	DIODE.1N4001	2	CR2 CR3
14	190584	RESISTOR 0.5 OHM 5W 10%	2	R17 R18
15	616706	SPACER	1	XQ4
16	201109	Diode 1N4148	8	CR1 CR4 CR5 CR6 CR7 CR8
				CR9 CR10
17	218598	RESISTOR,75K,1/4W,5%	1	R91
18	219433	RESISTOR,2.2K,1/4W,5%	8	R8 R21 R26 R35 R45
				R46 R67 R70
19	220034	RESISTOR,47K,1/4W,5%	11	R25 R27 R50 R81 R82
				R85 R86 R87 R88 R89
				R90
20	220035	RESISTOR,4.7K,1/4W,5%	2	R41 R79
21	220036	RESISTOR 470 OHM 1/4W 5%	1	R5
22	220044	RESISTOR,1K,1/4W,5%	8	R11 R12 R38 R48
				R59 R69 R84 R92
23	220053	RESISTOR,1.0 M,1/4W,5%,CARBON FILM	2	R47 R49
24	220054	RESISTOR,10K,1/4W,5%	11	R3 R14 R16 R28 R36
				R43 R55 R58 R61 R77
				R83
25	220060	RESISTOR,22K,1/4W,5%	1	R7
26	220062	RESISTOR,5.6K,1/4W,5%	4	R39 R40 R72 R73
27	220064	100K 1/4W 5% CARBON FILM	8	R13 R19 R22 R56 R57
				R71 R74 R500
28	223490	RESISTOR,100 OHM,1/4W,5%	2	R4 R64
29	224790	RESISTOR,82K,1/4W,5%	1	R60
30	224781	RESISTOR,1.8K,1/4W,5%	1	R51
31	224783	390 OHM 1/4W 5%	1	R68
32	224788	RESISTOR,8.2K,1/4W,5%	3	R20 R23 R54
33	224791	RESISTOR 39K 1/4W 5% CARBON FILM	1	R52
34	231347	RESISTOR,7.5K,1/4W,5%	3	R42 R65 R78
35	235891	RESISTOR,820 OHM,1/4W,5%	1	R15
36	236321	HEADER AMP 640456-6 6 POS STRAIGHT	1	P5
37	236322	HEADER 5 PIN 640456-5 AMP	1	P1
38	236375	CAPACITOR,10uF,50V,20%,AL ELEC	4	C5 C7 C14 C35
39	236377	HEADER AMP 640456-4 4 POS STRAIGHT	1	P4
40	241261	IC,L298N DUAL FULL BRIDGE DRIVER	1	U2
41	241262	L297N STEPPER MOTOR CONTROLLER	1	U7
42	241424	IC,QUAD,OPTOISOLATOR,ILQ2	3	U9 U10 U14
43	241470	HEADER SHROUDED POLARIZED 2 POS	1	J2
44	241522	RESISTOR,22 OHM,1/4W,5%	1	R10
45	251446	CAPACITOR,1uF,50V,20%,ELECTRO	1	C30
46	251448	CAPACITOR,22uF,50V,20%,AL ELECT	4	C10 C13 C16 C19
47	251499	CAPACITOR .01UF 15V CERAMIC 20%	4	C15 C25 C40 C41
48	251500	CAPACITOR,.33uF 50V 20%	1	C8

Item	Code no	Description	Quantity	
49	252336	CAPACITOR,4.7uF,35V,20%	1	C12
50	253383	IC,L7150	1	U1
51	257340	L6210 DUAL SCHOTTKY DIODE BRIDGE	1	U5
52	257341	CONNECTOR,POST 5 POS	1	P6
53	257343	CONNECTOR,AMPLATCH 30 POS RIGHT	1	J1
54	258372	TRANSISTOR,2N3964	1	Q5
55	259629	IC,DAC-08 EP,DIP16	2	U31 U32
56	291560	IC,LF353N,JFET DUAL OP AMP	1	U22
57	324670	RESISTOR,12 OHM,1/4W,5%	1	R62
58	336676	CAPACITOR,3300pF 50V 10%	1	C11
59	336825	CAPACITOR,.1uF,50V,10%	25	C1 C3 C4 C6 C17
				C18 C20 C21 C22 C23
				C24 C26 C27 C28 C29
				C31 C32 C34 C36
				C37 C38 C39 C42 C43
				C44
60	377300	2N4403 RV	1	Q3
61	432576	IC,HEX BUFFER,4049	1	U20
62	432640	IC,2 IN QUAD NAND,40938E	1	U15
63	437412	RESISTOR NETWORK,10K 8 ISOLATED	1	U11
64	440818	CAPACITOR,.1uF,50V,10%	2	C2 C9
65	480042	IC,8 IN NAND,14068	2	U16 U27
66	480139	HEADER AMP 640456-3 3 POS STRAIGHT	1	P2
67	480309	HEADER AMP 640456-2 2 POS STRAIGHT	1	P3
68	480709	IC,12 BIT BINARY COUNTER,14040	2	U19 U28
69	480877	IC,LINEAR OP-AMP,LM358N	3	U12 U21 U23
70	486324	RESISTOR NETWORK,1K	1	U13
71	493128	RESISTOR,2.4K,1/4W,5%	3	R44 R75 R76
72	493129	RESISTOR,20K,1/4W,5%	2	R63 R80
73	493131	RESISTOR,51K,1/4W,5%	1	R24
74	493221	RESISTOR,75 OHM,5W,10%	1	R6
75	522881	TRANSISTOR 2N3904RV TO-92	9	Q6 Q7 Q8 Q9 Q10
				Q11 Q12 Q13 Q14
76	257337	HEATSINK-DRIVER	1	H1
77	528668	TRANSISTOR,2N5191	2	Q1 Q2
78	537098	RESISTOR,5 OHM,5W,5%	1	R2
79	549660	VOLTAGE REGULATOR,5V,7805	1	U4
80	555081	IC,AND QUAD 2IN	2	U17 U24
81	565979	IC,LINEAR OP-AMP,LM324N	1	U29
82	571752	RESISTOR,5.1K 1/4W 5% CARBON FILM	1	R32
83	571770	POT,2K,1/2W,10%,MULTI-TURN	2	R33 R66
84	571771	POTENTIOMETER,1K,1/2W,10%,MULTI	1	P1
85	581471	CAPACITOR,47uF 50V 20% ELECTROLYTIC	1	C33
86	581477	50K 3299W-1-1503 BOURNS	2	R34 R53
87	588564	74LS541 OCTAL BUFFER/LINE DRIVER	1	U8
88	595001	IC,SN74LS14N	1	U6
89	613996	IC,BINARY FLIP/FLOP,4027	3	U18 U25 U26
90	678261	WIRE JUMPER,UNINSULATED,22 AWG	1	X1
91	791685	TRANSISTOR,PNP GENERAL PURPOSE 2N2	1	Q4
92	795638	TEST PIN .025 POST GOLD PLATED 876	15	TP1 TP2 TP3 TP4 TP5
				TP6 TP7 TP8 TP9 TP10
				TP11 TP12 TP13 TP14 TP15
93	898213	RESISTOR,2.2 OHM,2W,10%,WIREWOUND	1	R9
94	598831	VOLTAGE REGULATOR,12V,7812	1	U3
95	784085	MOD DRAWING-FRAME DRIVER ASSY	0	
96	236353	CAPACITOR,10 uF,50V,ELECTRO	1	C45

Figure 11B
FRAME DRIVER Schemat
Style 2
Models 7700 and 7720

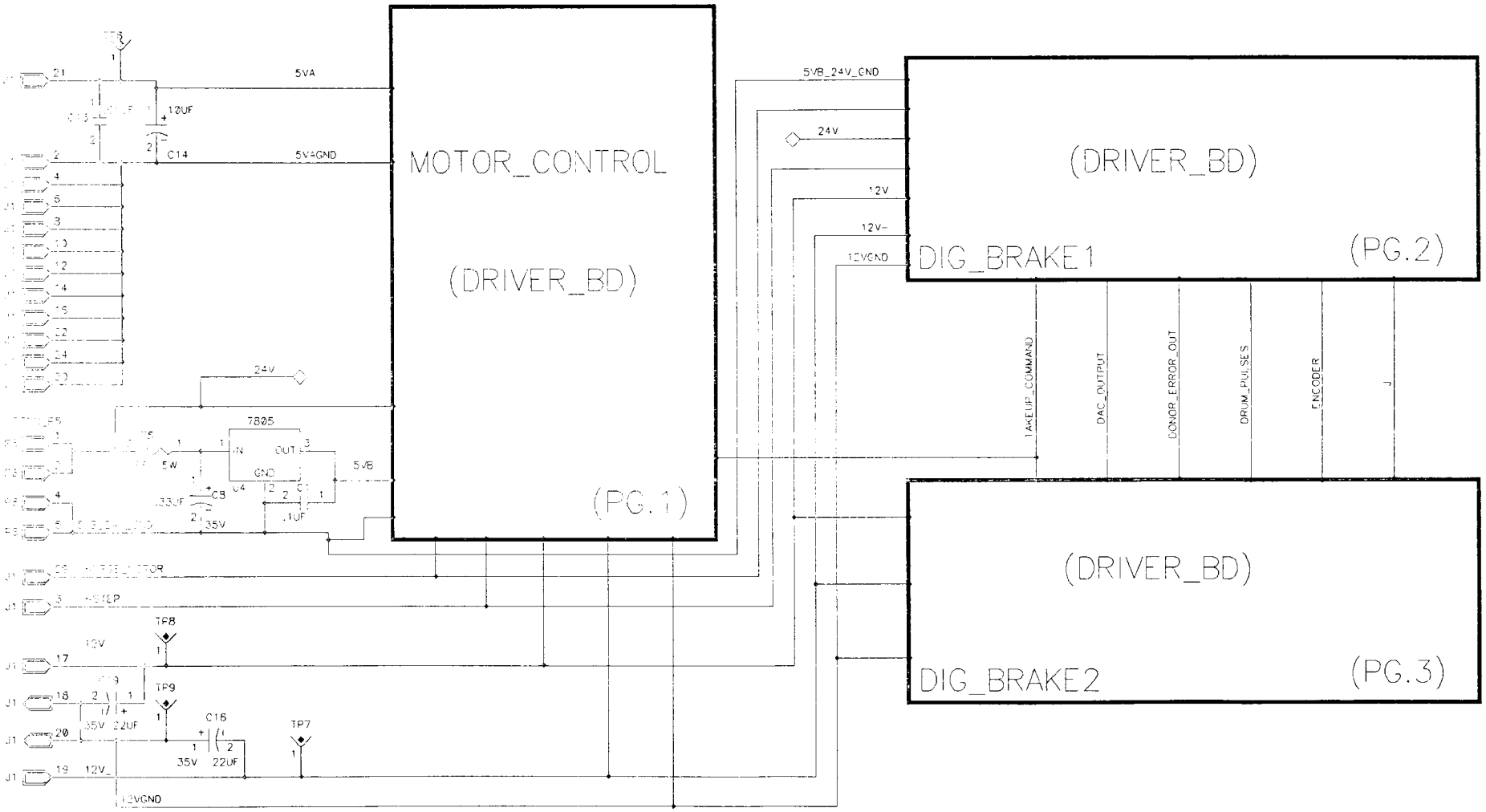

Figure 11C
FRAME DRIVER Schematic
Style 2
Models 7700 and 7720

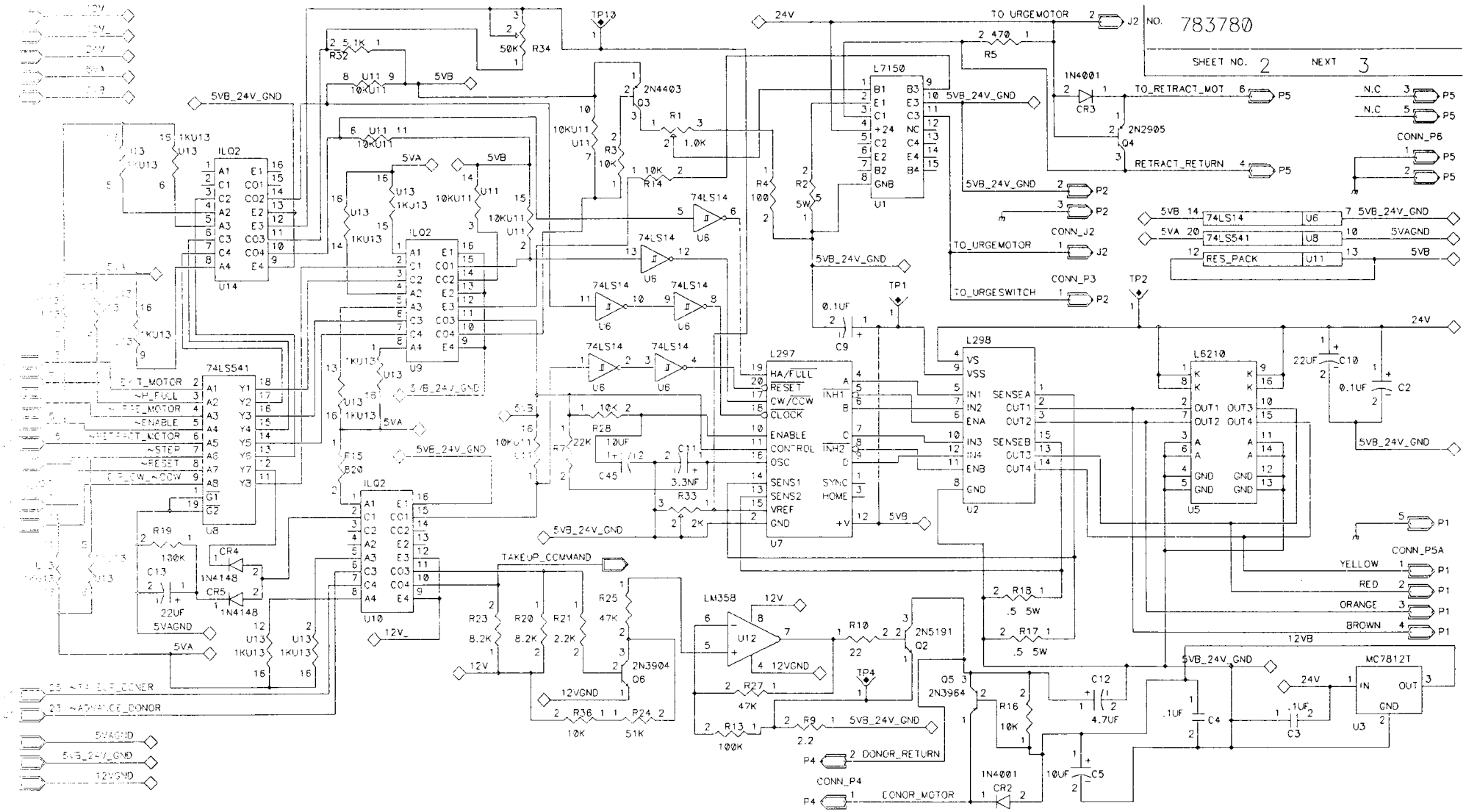

Figure 11D
FRAME DRIVER Schemat
Style 2
Models 7700 and 7720

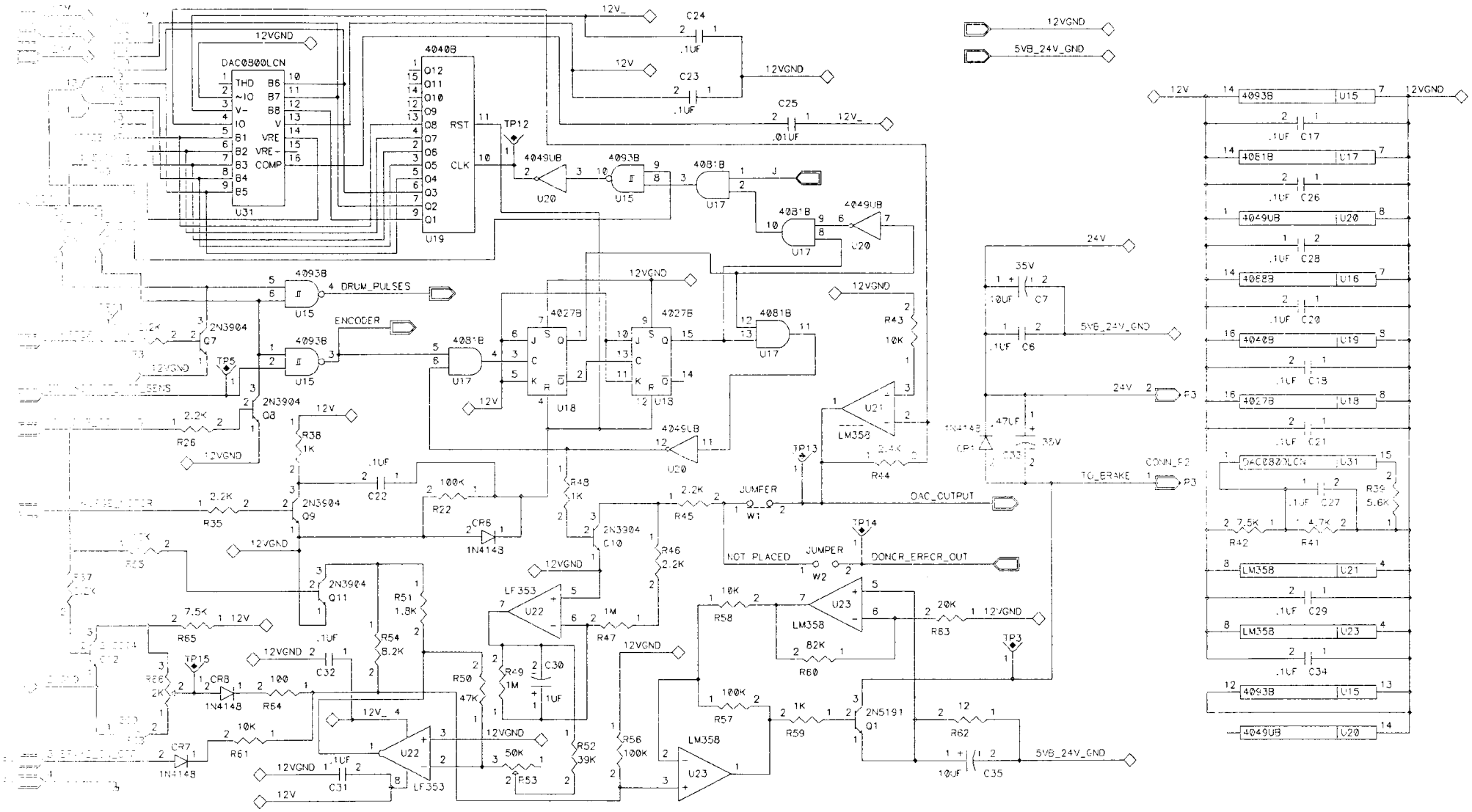

Figure 11E
FRAME DRIVER Schema
Style 2
Models 7700 and 7720

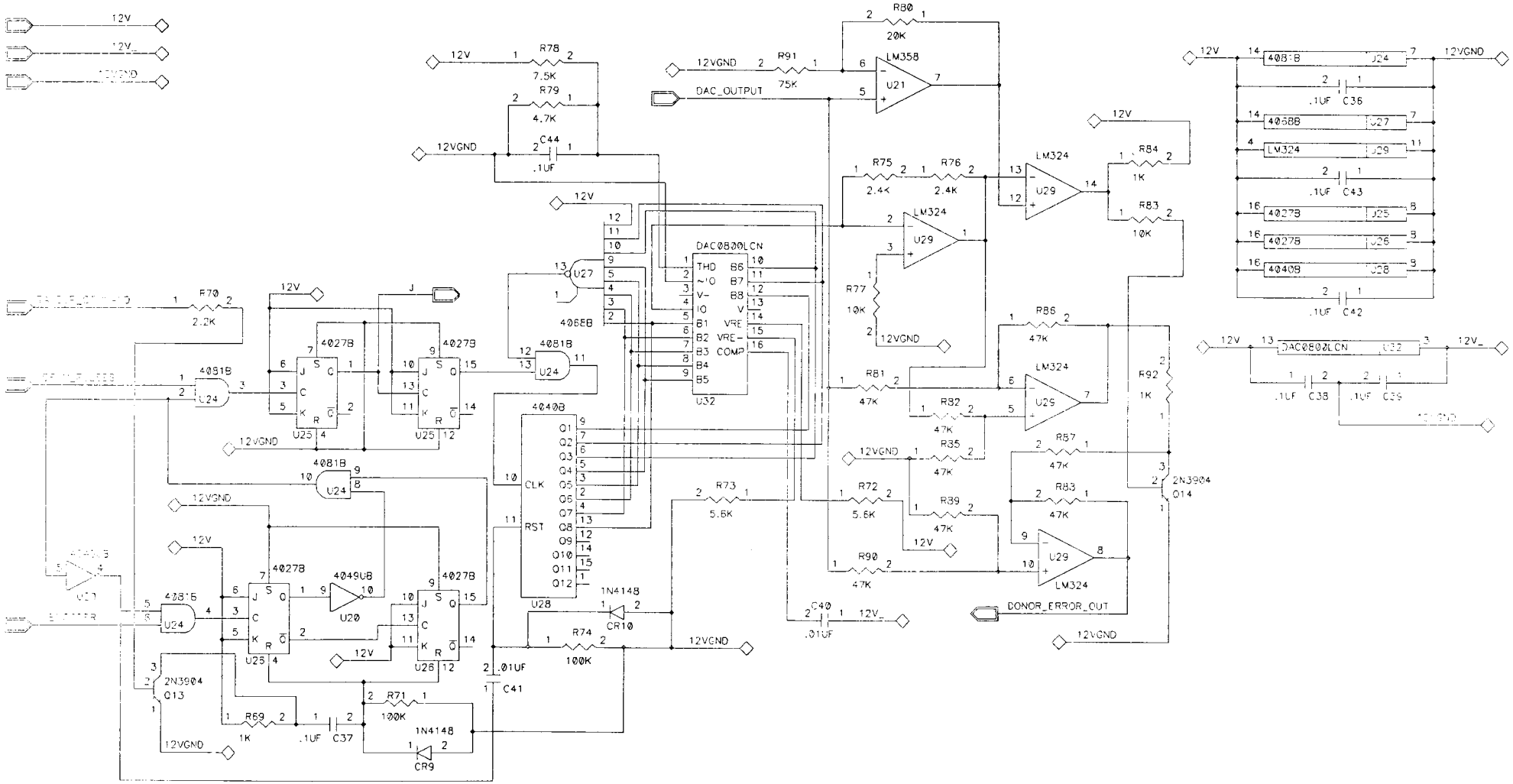

Figure 11F
FRAME DRIVER Schemat
Style 2
Models 7700 and 7720

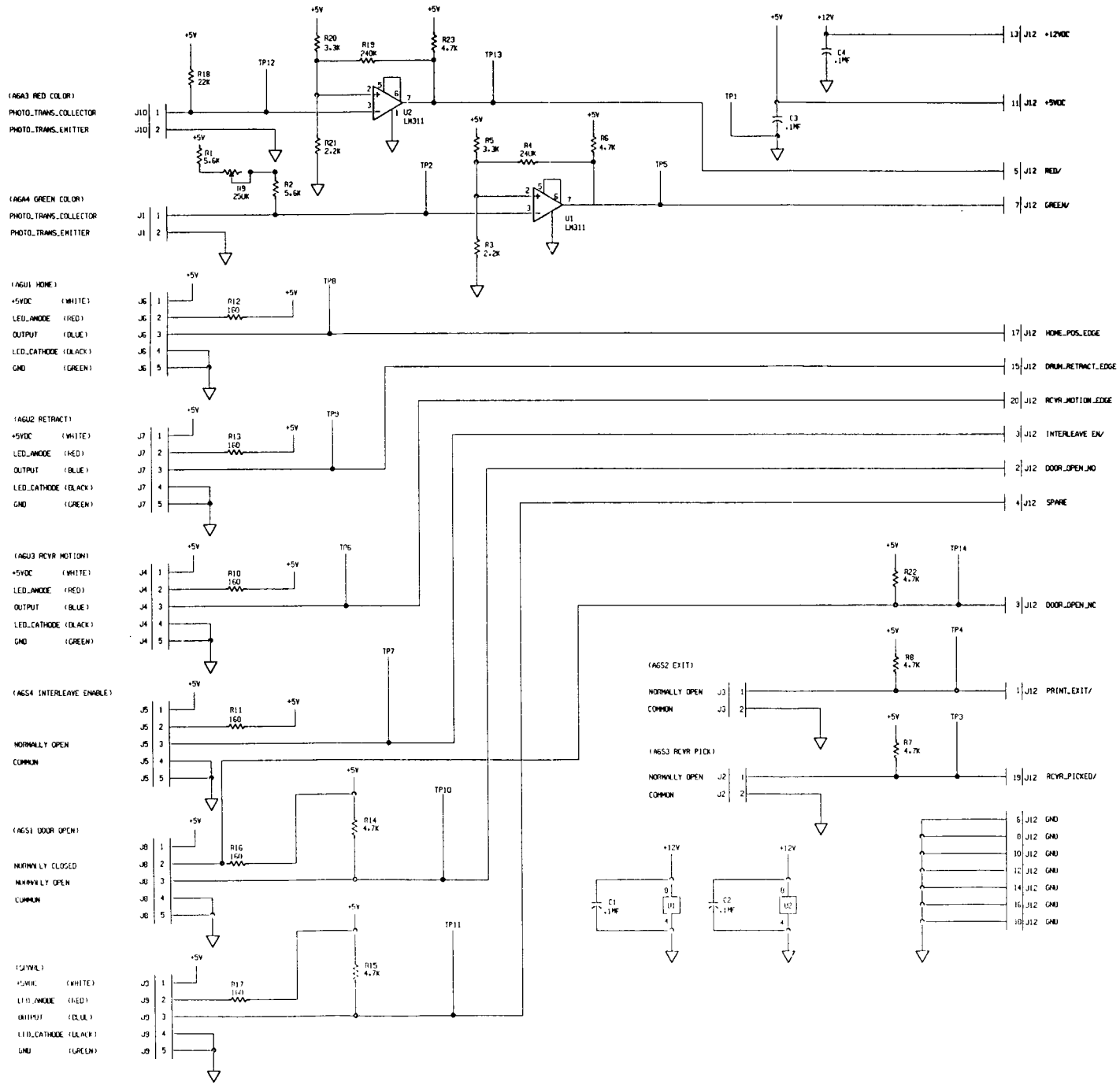

Figure 12
FRAME SENSOR Schema
Models 7700 and 7720

Part no	Description	Quantity	Ref Des
744540	BOARD-PC	1	
219433	RESISTOR,2.2K,1/4W,5%	2	R3 R21
220033	RESISTOR,3.3K,1/4W,5%	2	R5 R20
220035	RESISTOR,4.7K,1/4W,5%	6	R6 R7 R8 R14 R22 R23
220060	RESISTOR,22K,1/4W,5%	1	R18
220062	RESISTOR,5.6K,1/4W,5%	2	R1 R2
227563	RESISTOR,240K,1/4W,5%	2	R4 R19
241470	HEADER SHROUDED POLARIZED 2 POS	4	J1 J2 J3 J10
253387	RESISTOR,160 OHMS,1/4W,5%	3	R10 R12 R13
273970	HEADER SHROUDED POLARIZED 5 POS	5	J4 J5 J6 J7 J8
734518	HEADER,RIGHT ANGLE 20 POS.	1	J12
440818	CAPACITOR,.1uF,50V,10%	4	C1 C2 C3 C4
448117	POT,250K,1/2W	1	R9
535871	IC,VOLTAGE COMPARATOR,311N	2	U1 U2
795638	TEST PIN,AMP .025	14	TP1 TP2 TP3 TP4 TP5 TP6 TP7 TP8 TP9 TP10 TP11 TP12 TP13 TP14
616392	LATCH,LONG	2	XJ12
273970	HEADER SHROUDED POLARIZED 5 POS	0	J9
220035	RESISTOR,4.7K,1/4W,5%	0	R15
253387	RESISTOR,160 OHMS,1/4W,5%	0	R11 R16 R17

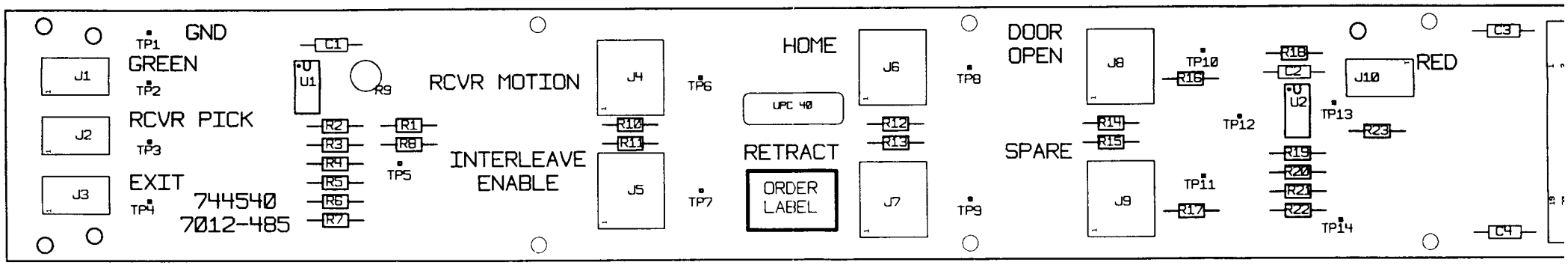

Figure 13
FRAME SENSOR Compor
Models 7700 and 7720

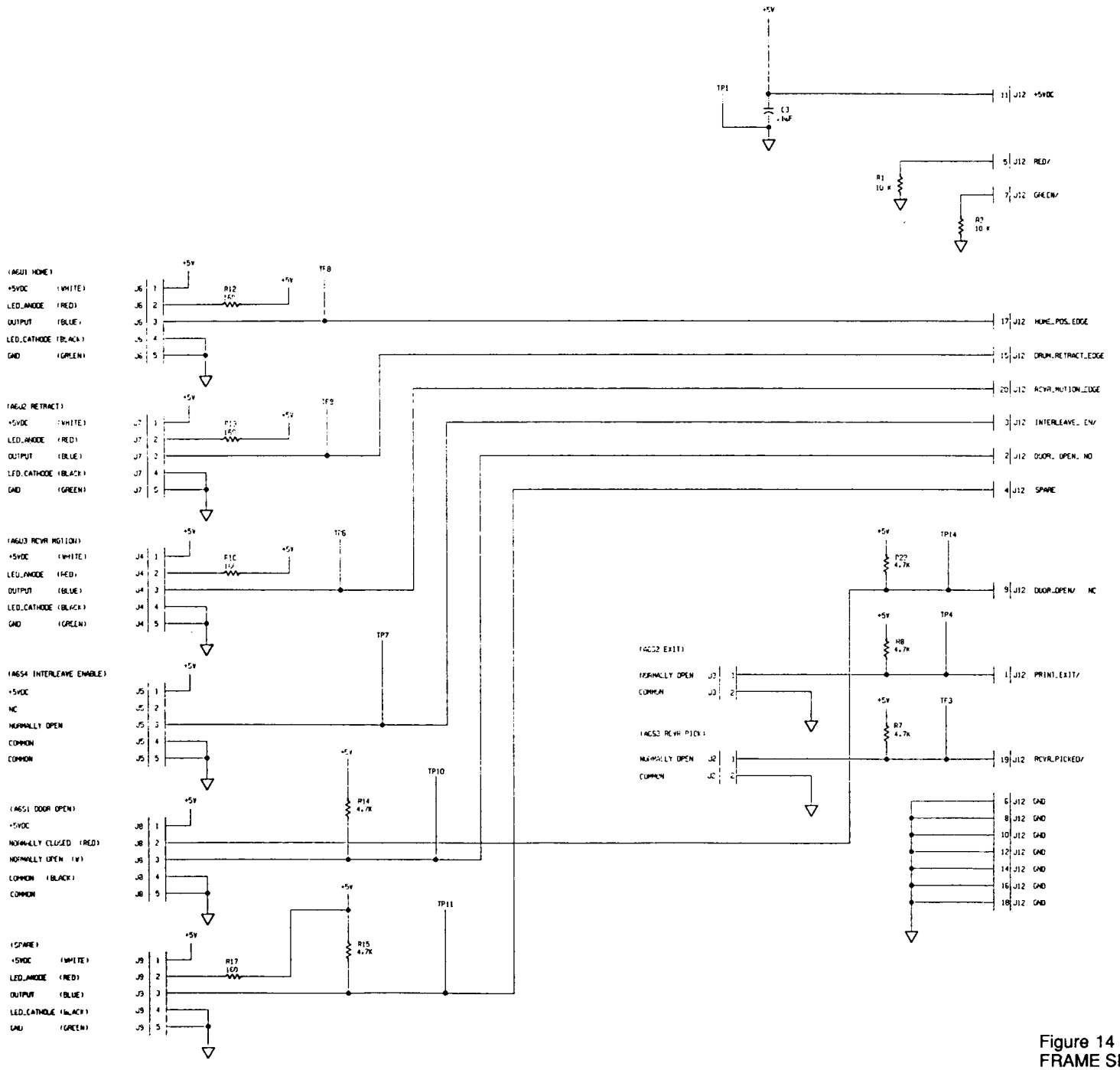

Figure 14
FRAME SENSOR, B/W Schematic
Model 7700

Part No	Description	Quantity	
259366	BOARD-PC,FRAME SENSOR,B/W	1	
220035	RESISTOR,4.7K,1/4W,5%	4	R7 R8 R14 R22
220054	RESISTOR,10K,1/4W,5%	2	R1 R2
241470	HEADER SHROUDED POLARIZED 2 POS	2	J2 J3
253387	RESISTOR,160 OHMS,1/4W,5%	3	R10 R12 R13
273970	HEADER SHROUDED POLARIZED 5 POS	5	J4 J5 J6 J7 J8
734518	HEADER,RIGHT ANGLE 20 POS.	1	J12
440818	CAPACITOR,.1uF,50V,10%	1	C3
795638	TEST PIN,AMP .025	9	TP1 TP3 TP4 TP6 TP7 TP8 TP9 TP10 TP14
616392	LATCH,LONG	2	XJ12
273970	HEADER SHROUDED POLARIZED 5 POS	0	J9
220035	RESISTOR,4.7K,1/4W,5%	0	R15
253387	RESISTOR,160 OHMS,1/4W,5%	0	R17
795638	TEST PIN,AMP .025	0	TP11

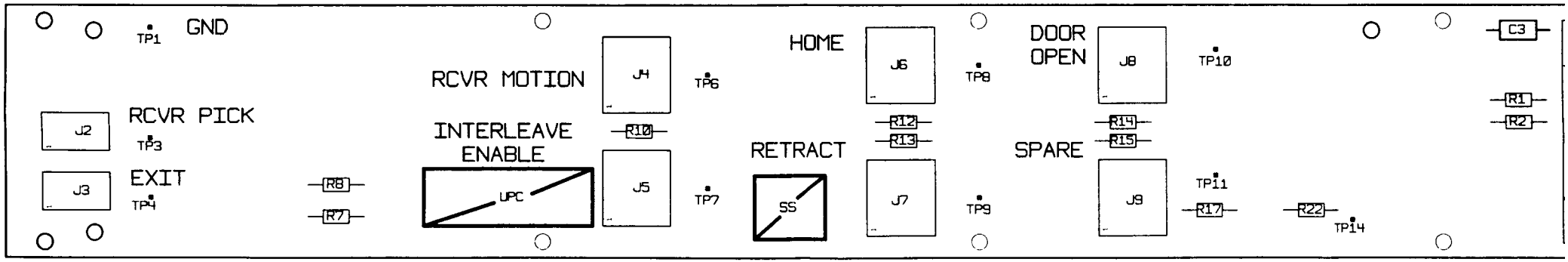

Figure 15
FRAME SENSOR Components, E
Model 7700

NOTE: CONNECTION TO ENCLOSURE AT MOUNTING HOLE.

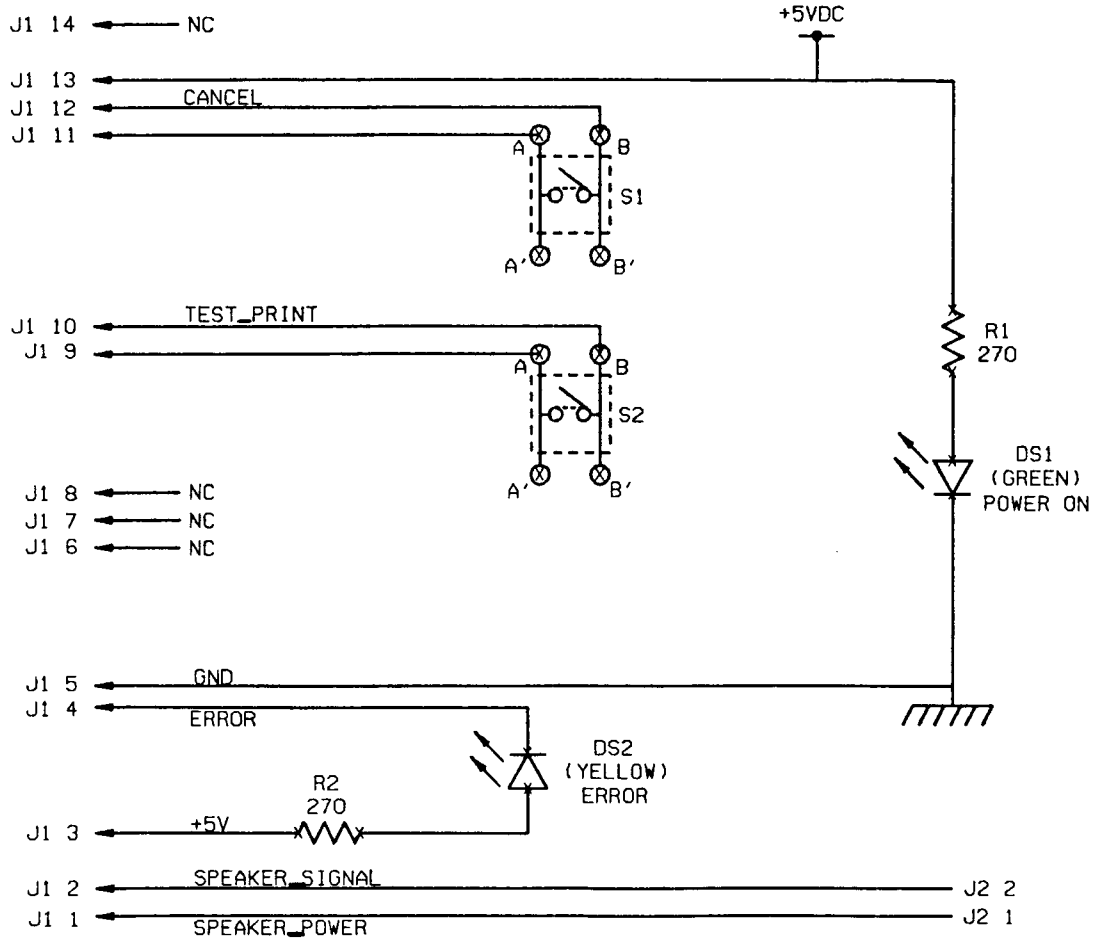

Figure 16
FRONT PANEL Sch
Models 7700 and 7

NOTE: DS1,DS2 HEIGHT ABOVE PCB TO BE .310 MAX

Part no	Description	Quantity	Ref
		0	
717757	P.C. BOARD	1	
220051	RESISTOR,270 OHM 1/4W 5%	2	R1
253425	SWITCH,PUSH BUTTON,MOMENTARY ACTION	2	S1
257911	LED,YELLOW	1	DS2
257912	LED,GREEN	1	DS1
744594	HEADER,RIGHT ANGLE,14 POSITION	1	J1
744595	HEADER,RIGHT ANGLE,2 POSITION	1	J2

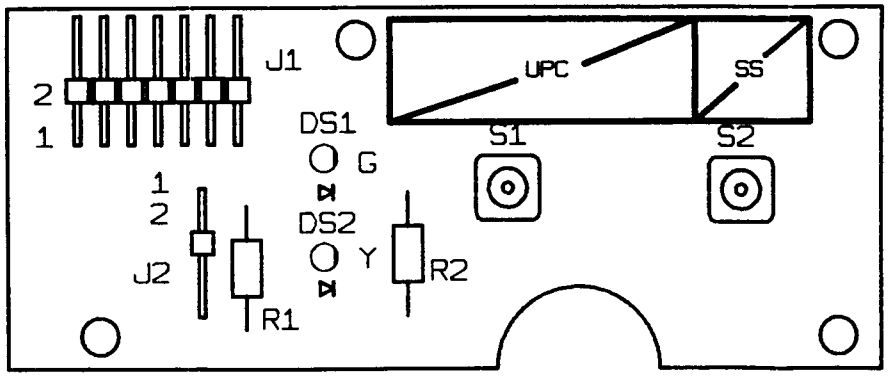

Figure 17
FRONT PANEL Componei
Models 7700 and 7720

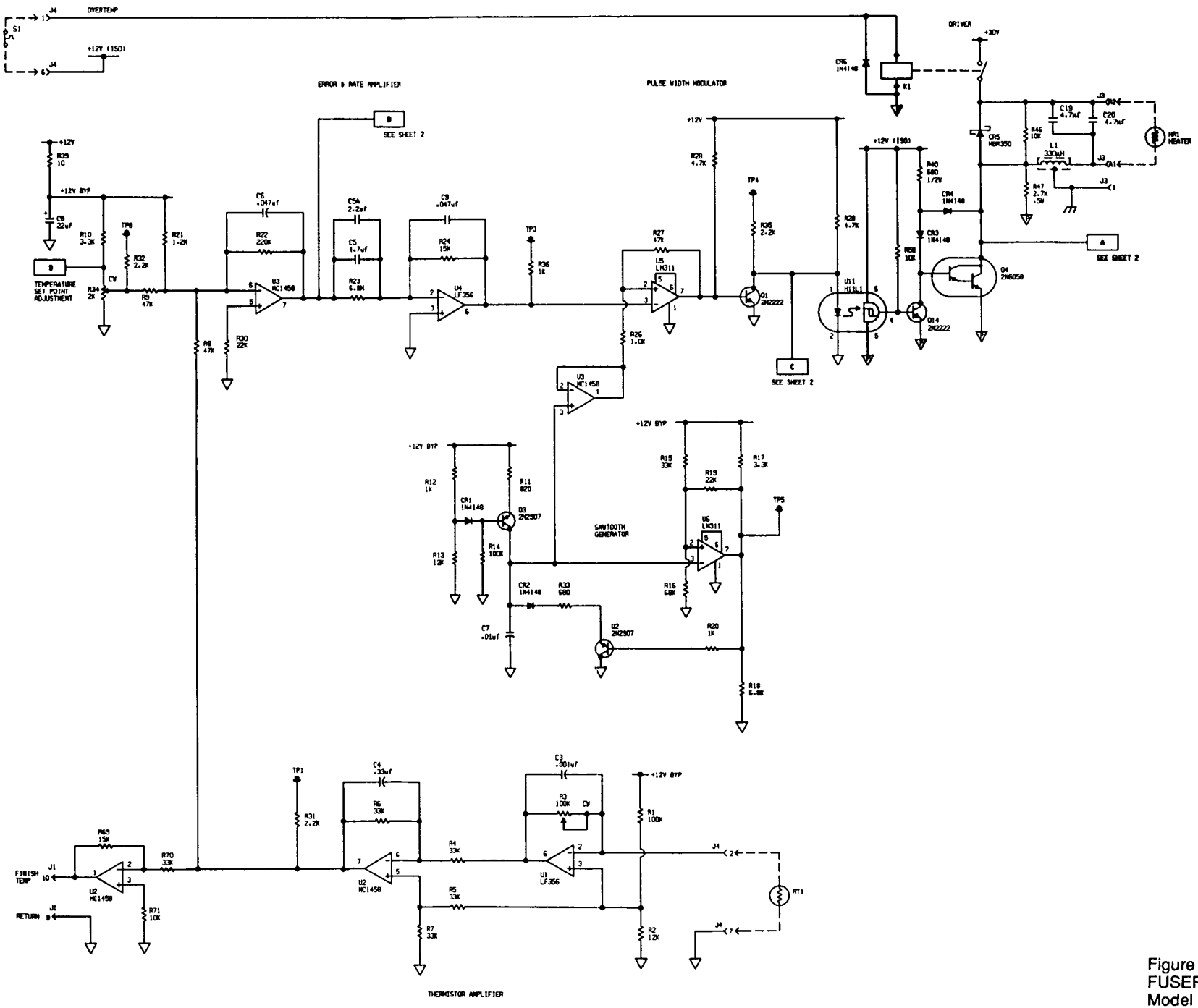

Figure 18
FUSER CONTROLLER Sc
Model 7700

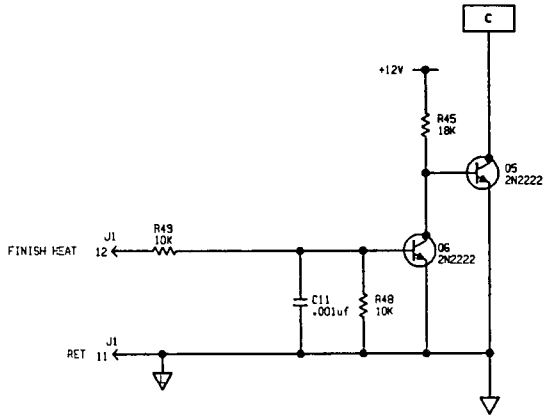

HEATER ON/OFF COMMAND

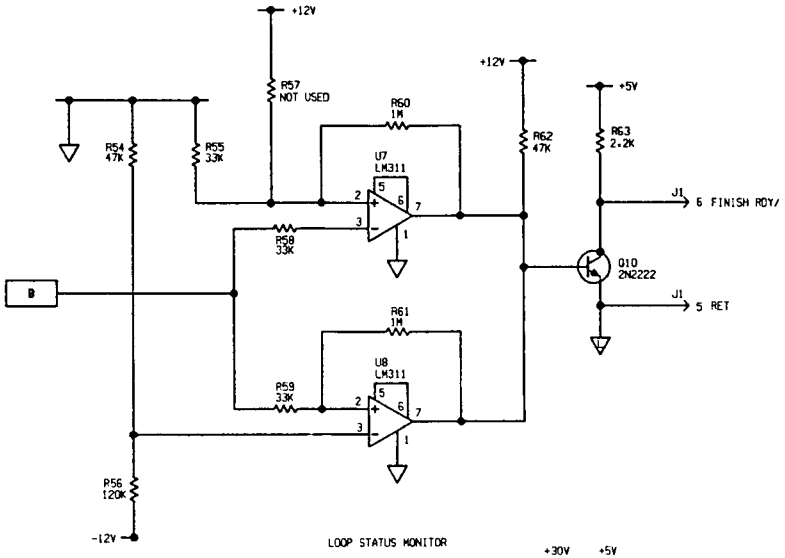

LOOP STATUS MONITOR

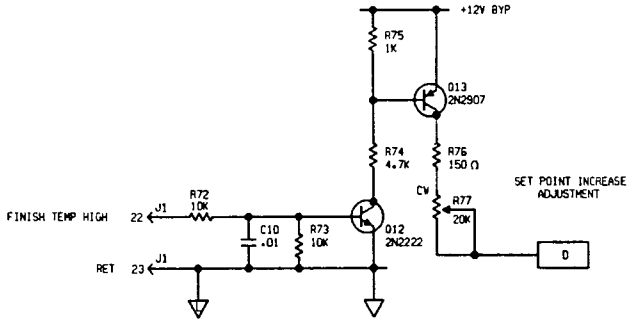

DUAL TEMPERATURE CONTROL

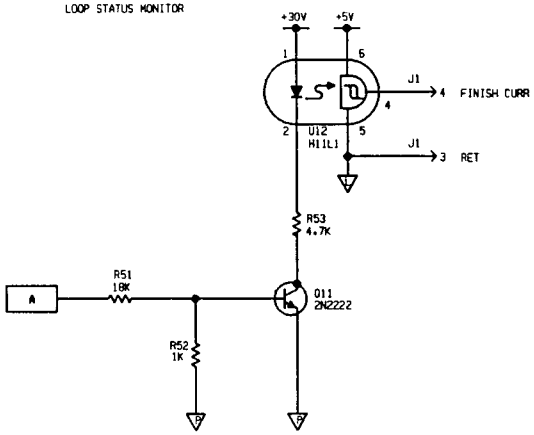

ELEMENT CIRCUIT CONTINUITY MONITOR

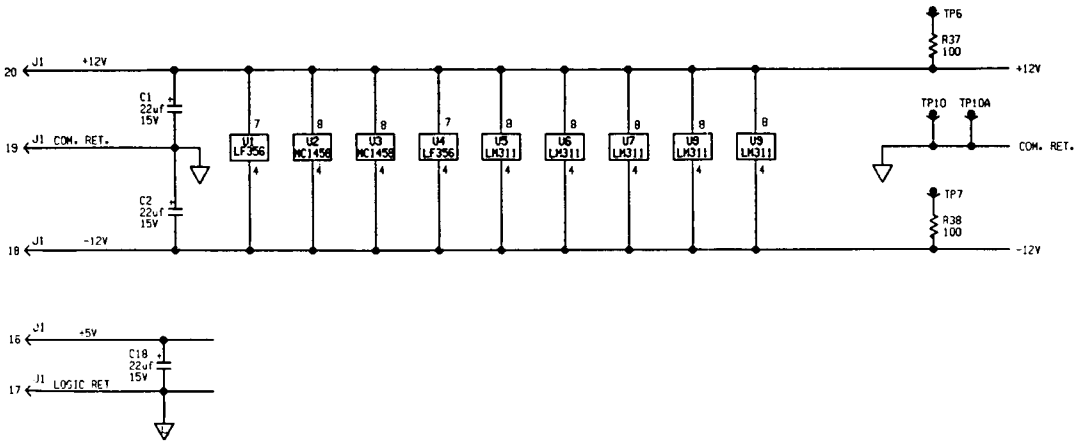

Figure 19
Style 1 FUSER CONTROLLER Sche
Model 7700

NOTES

LOGIC SUPPY (+5V) RETURN

ANALOG SUPPLY (+ & -12V) COMMON RETURN

24-VOLT A.C.RETURN

ACTUATOR SUPPLY (+24V UNREG.) RETURN

PRINTHEAD SUPPLY RETURN

NON CURRENT-CARRYING CONDUCTIVE SURFACE

PARTIAL REFERENCE DESIGNATIONS ARE SHOWN. FOR COMPLETE DESIGNATOR, ADD PREFIX FROM 'NEXT ASSY' TABLE.

UNLESS INDICATED OTHERWISE, ALL RESISTORS ARE 1/4W, 5%.

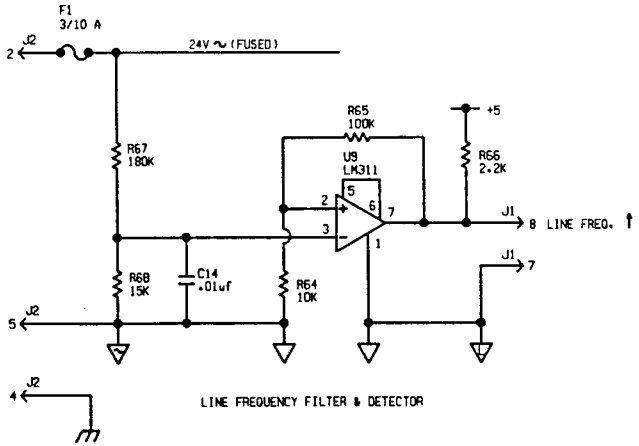

LINE FREQUENCY FILTER & DETECTOR

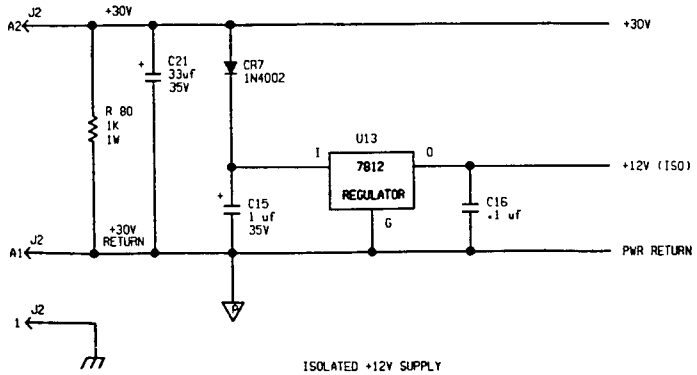

ISOLATED +12V SUPPLY

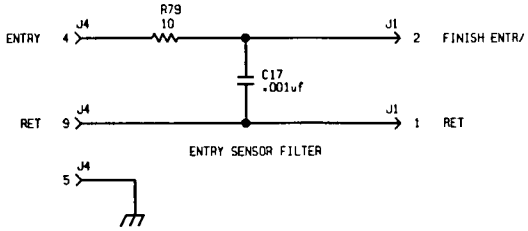

ENTRY SENSOR FILTER

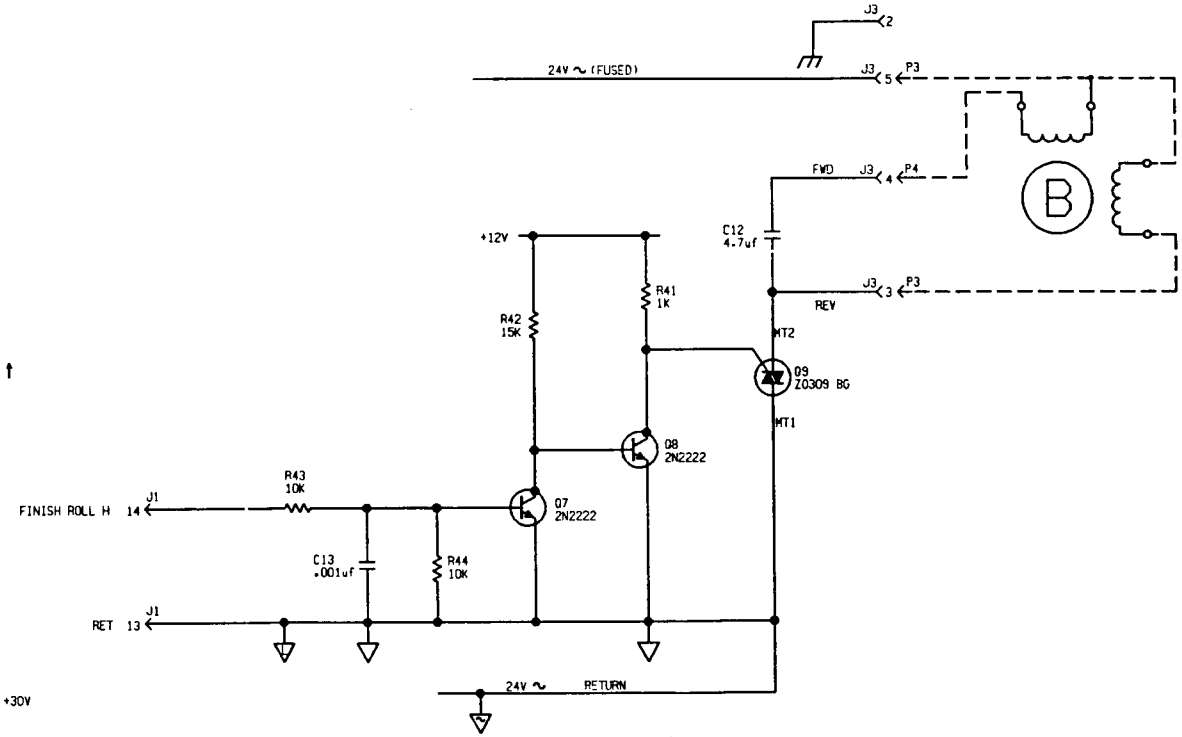

MOTOR ON/OFF CMD

Figure 20
Style 1 FUSER CONTROLLER Scher
Model 7700

NOTE

WARNING: TO INSURE CORRECT HEAT SINKING, DIODE CR5 MUST BE MOUNTED WITH ANODE GND AGAINST PCB AS SHOWN.

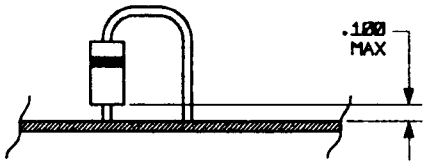

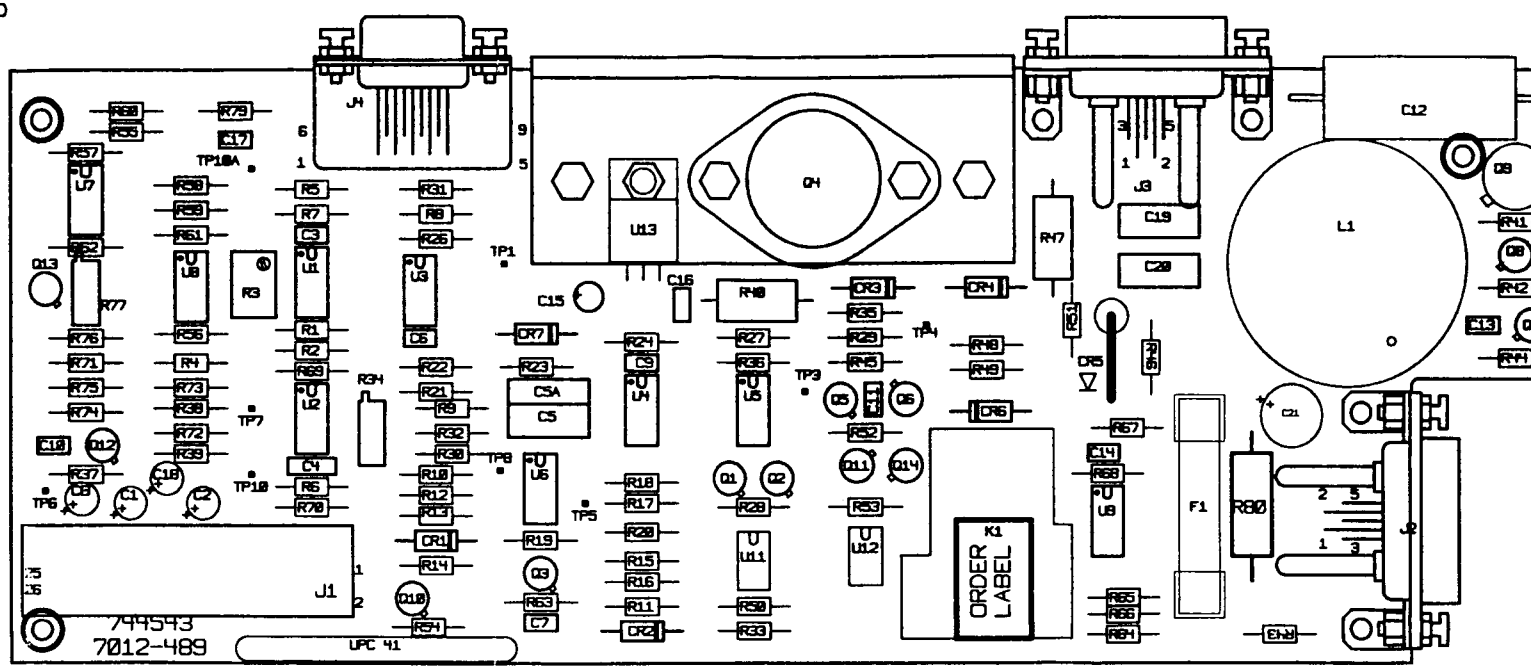

Figure 21
Style 1 FUSER CONTROLLER Con
Model 7700

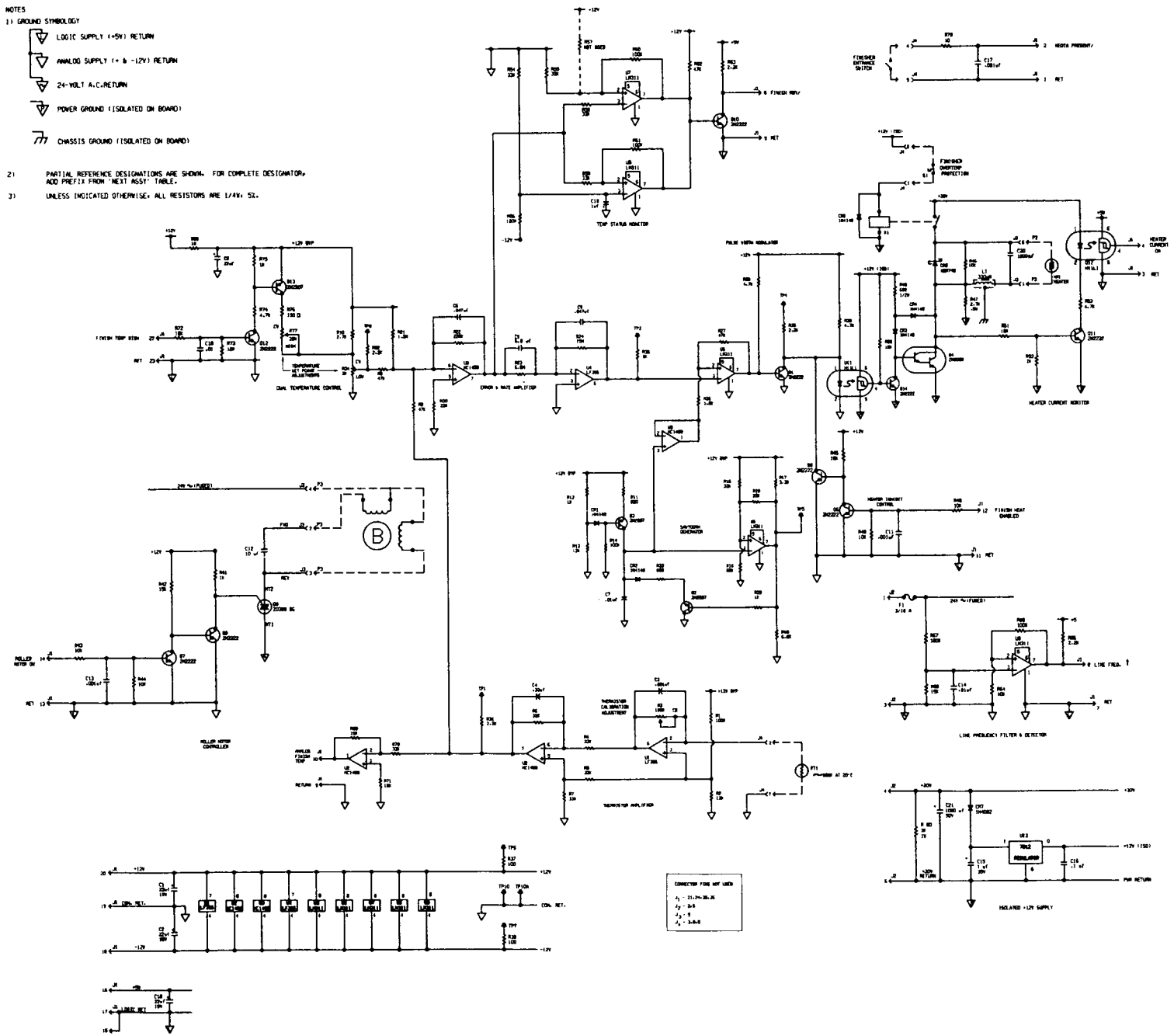

Figure 21A
FINISHER CONTROLLER Schem
Style 2
Models 7700 and 7720

NOTES:

(1) U13 TO BE "AH" FORM

(2) LATCHING POSTS(744608)TO BE ASSEMBLED AS FOLLOWS: POST THROUGH 1 LOCKWASHER,THEN 1 FLATWASHER,THEN THROUGH CONNECTOR BODY AND SCREWED INTO RIGHT ANGLE BRACKET OR STANDOFF.DO NOT TIGHTEN UNTIL AFTER CONNECTOR IS INSTALLED ONTO BOARD,BUT PRIOR TO SOLDER.

(3) ATTACH HEAT SINK (259840) TO CR5 (259839) BEFORE INSTALLING CR5 ON BOARD

(4) R57 NOT USED.

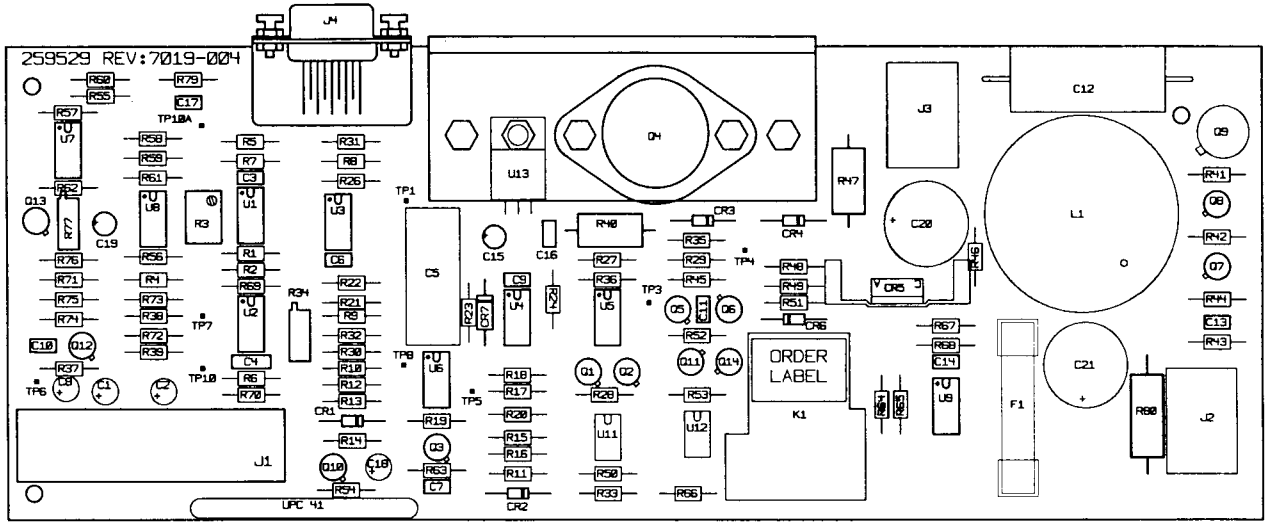

Figure 21B
FINISHER CONTROLLER Comp
Style 2
Models 7700 and 7720

Item	Part no	Description	Quantity	
1	259531	SCHEMATIC	0	
2	259529	BOARD,PC(FUSER CONTROLLER)	1	
3	179713	NUT 4-40	7	XJ4 XH1 XQ4 XU13
4	105420	LOCKWASHER	7	XJ4 XH1 XQ4 XU13
5	128531	WASHER	4	XJ4 XH1
6	253389	THERMAL PAD FOR TO-220 TRANS	1	
7	257320	HEATSINK FOR 2N6058 TRANSISTOR	1	H1
8	257325	THERMAL PAD FOR TO-3 TRANS	1	
9	616392	LATCH,LONG,W/O PUSH PINS	2	XJ1
10	259840	HEATSINK	1	XCR5
11	744603	PEM STUD 4-40	7	XJ4 XH1 XQ4 XU13
12	744608	LATCHING POST KIT	2	XJ4
13	258282	FUSE,.3A	1	F1
14	168046	RESISTOR 1K 1W 5%	1	R80
15	191179	Diode 1N4002	1	CR7
16	201109	Diode 1N4148	5	CR1 CR2 CR3 CR4 CR6
17	201207	CLIP-FUSE	2	XF1
18	219300	2.2K 1/4W 5% CARBON FILM	5	R31 R32 R35 R63 R66
19	220033	RESISTOR,3.3K,1/4W,5%	1	R17
20	220034	RESISTOR,47K,1/4W,5%	4	R8 R9 R27 R62
21	220035	RESISTOR,4.7K,1/4W,5%	4	R28 R29 R53 R74
22	220038	RESISTOR 12K 1/4W 5% C.F.	2	R2 R13
23	220039	RESISTOR,120K,1/4W,5%	1	R56
24	220040	68K 1/4W 5% CARBON FILM	1	R16
25	220041	RESISTOR,6.8K,1/4W,5%	1	R18
26	220043	33K 1/4W 5% CARBON FILM	10	R4 R5 R6 R7 R15 R54 R55 R58 R59 R70
27	220044	RESISTOR,1K,1/4W,5%	7	R12 R20 R26 R36 R41 R52 R75
28	220045	RESISTOR,18K,1/4W,5%	2	R45 R51
29	220046	RESISTOR,680 OHM,1/4W,5%	1	R33
30	220052	RESISTOR,2.7K,1/4W,5%	1	R10
31	220054	RESISTOR,10K,1/4W,5%	10	R43 R44 R46 R48 R49 R50 R64 R71 R72 R73
32	220056	RESISTOR 180K 1/4W 5%	1	R67
33	220057	RESISTOR,220K,1/4W,5%	1	R22
34	220060	RESISTOR,22K,1/4W,5%	2	R19 R30
35	220064	100K 1/4W 5% CARBON FILM	5	R1 R14 R60 R61 R65
36	223490	RESISTOR,100 OHM,1/4W,5%	2	R37 R38

Item	Part no	Description	Quantity	
37	224778	150 OHM 1/4W 5%	1	R76
38	895279	CAPACITOR,.1uF,100V,20%	1	C16
39	224798	RESISTOR 15K 1/4W 5%	3	R42 R68 R69
40	235891	RESISTOR,820 OHM,1/4W,5%	1	R11
41	236378	POT,20K,1/2W,10%,22 TURN	1	R77
42	241076	CAPACITOR,.001uF 100V 20%	4	C3 C11 C13 C17
43	243853	26 PIN RIGHT ANGLE CONNECTOR	1	J1
44	251499	CAPACITOR .01UF 15V CERAMIC 20%	3	C7 C10 C14
45	251500	CAPACITOR,.33uF 50V 20%	1	C4
46	252338	CAPACITOR,22uF,16V,20%	4	C1 C2 C8 C18
47	258280	RELAY,GENERAL PURPOSE,30A,T90	1	K1
48	259377	INDUCTOR,CUSTOM,330uH	1	L1
49	259831	CAPACITOR,1000uF,50V,20%,ELECT	2	C20 C21
50	259839	DIODE,MBR735	1	CR5
51	259948	CAPACITOR,6.8uF,63V,10%	1	C5
52	330797	RESISTOR 680 1/2W 5% CARBON FILM	1	R40
53	336608	POT,2K,1/2W,10%,22 TURN	1	R34
54	336827	CAPACITOR,.047uF,15V,20%,CERAMIC	2	C6 C9
55	376773	CAPACITOR,1.0uF 35V 20%	2	C15 C19
56	486292	RESISTOR,10 OHM,1/4W,5%	2	R39 R79
57	492843	RESISTOR,15 MEG,1/4W,5%,CC	1	R24
58	498221	2N2222	9	Q1 Q5 Q6 Q7 Q8 Q10 Q11 Q12 Q14
59	498300	2N2907	3	Q2 Q3 Q13
60	498338	IC,LF356	2	U1 U4
61	535871	IC,VOLTAGE COMPARATOR,311N	5	U5 U6 U7 U8 U9
62	548645	MC1458PI	2	U2 U3
63	549661	IC,7812,+12V REGULATOR	1	U13
64	563569	2N6058	1	Q4
65	571772	POT,100K,1/2W,10 TURN,TOP ADJ	1	R3
66	598810	RESISTOR,1.2M,1/4W,5%	1	R21
67	620143	IC,OPTO-ISOLATOR,H11L1	2	U11 U12
68	659588	CAPACITOR,10uF,63V,10%	1	C12
69	721592	RESISTOR,6.8M,1/4W,5%	1	R23
70	744558	RESISTOR 2.7K 1/2W 5% CARBON FIL	1	R47
71	259537	HEADER,6 CKT,PINS	1	J2
72	744600	TRIAC,Z03098G	1	Q9
73	744602	CONNECTOR,9 PIN SOCKET	1	J4
74	259536	HEADER,6 CKT,SOCKETS	1	J3
75	795638	TEST PIN .025 POST GOLD PLATED 876	9	TP1 TP3 TP4 TP5 TP6 TP7 TP8 TP10 TP10A

Figure 21C
FINISHER CONTROLLER Componer
Style 2
Models 7700 and 7720

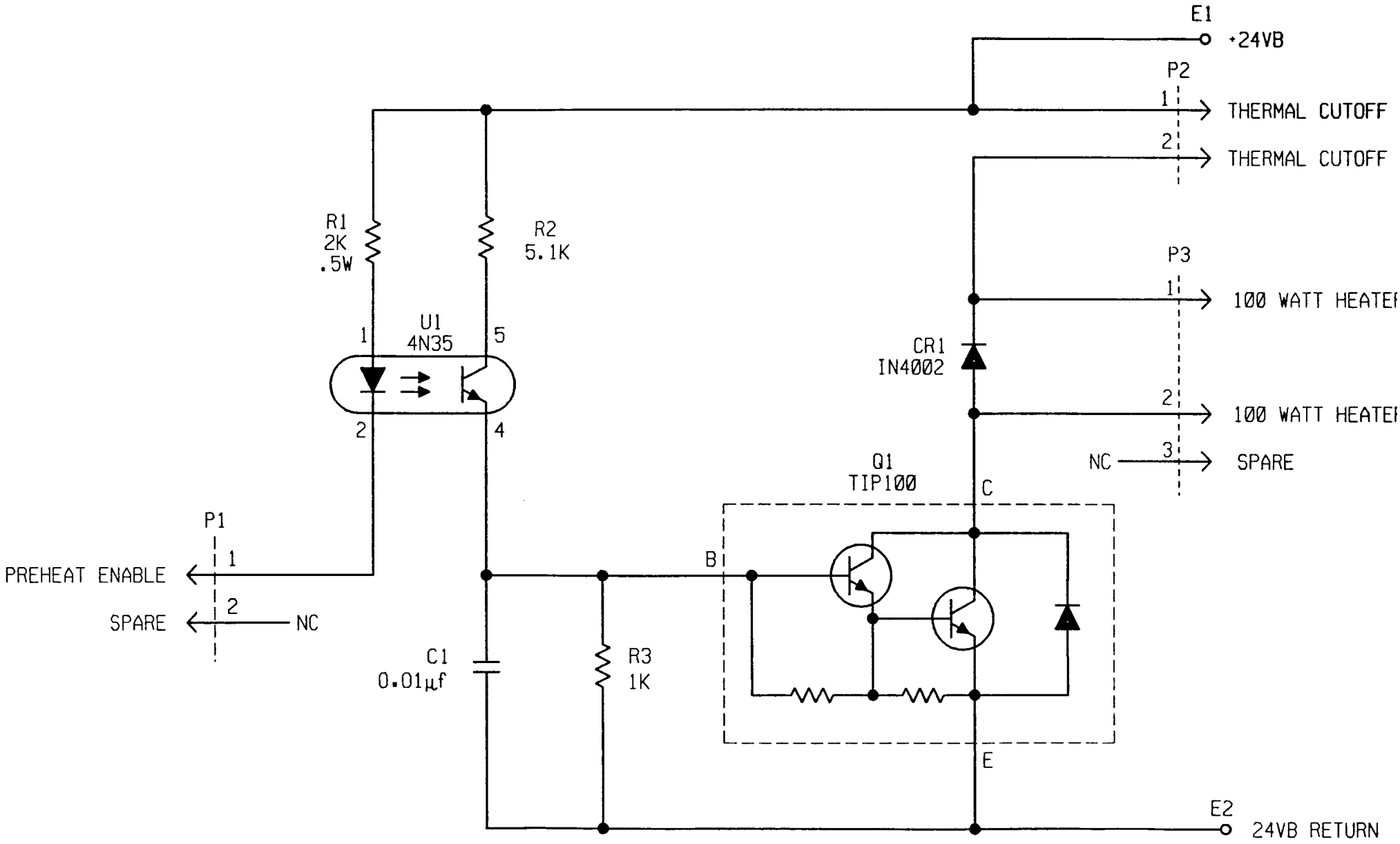

Figure 22
PRE-HEAT DRIVER BOARD Sc
Figure 7700

Part no	Description	Quantity		
258707	BOARD-PC,PREHEAT DRIVER	1		
191179	Diode 1N4002	1	CR1	
220044	RESISTOR,1K,1/4W,5%	1	R3	
241470	HEADER SHROUDED POLARIZED 2 POS	1	P1	
258771	RESISTOR,2K,1/2W,5%	1	R1	
258773	HEADER,2 POS.,RIGHT ANGLE,LOCKING	1	P2	
258774	HEADER,3 POS. RIGHT ANGLE,LOCKING	1	P3	
485864	IC,OPTOISOLATOR,4N35	1	U1	
571752	RESISTOR,5.1K 1/4W 5% CARBON FILM	1	R2	
659452	Capacitor 0.01UF 50V 10%	1	C1	
724647	LOW PROFILE POWER TAP,10 PIN	2	E1	E2
738973	TRANSISTOR,POWER,TIP100	1	Q1	

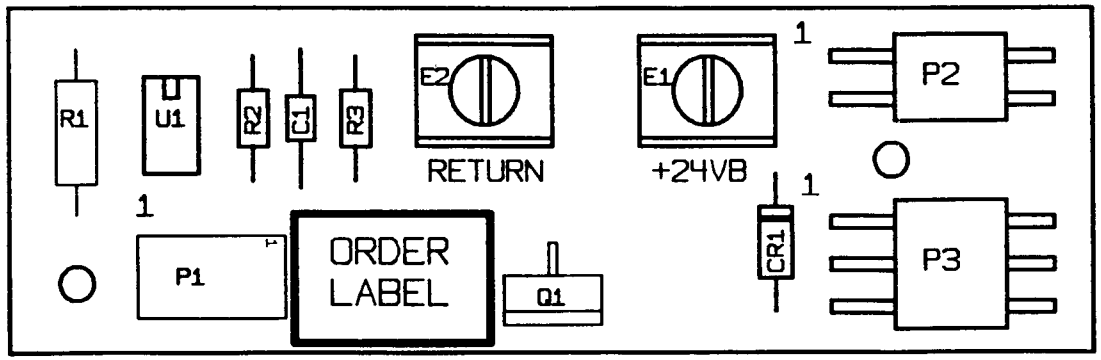

Figure 23
PRE-HEAT DRIVER BOARD Componei
Model 7700

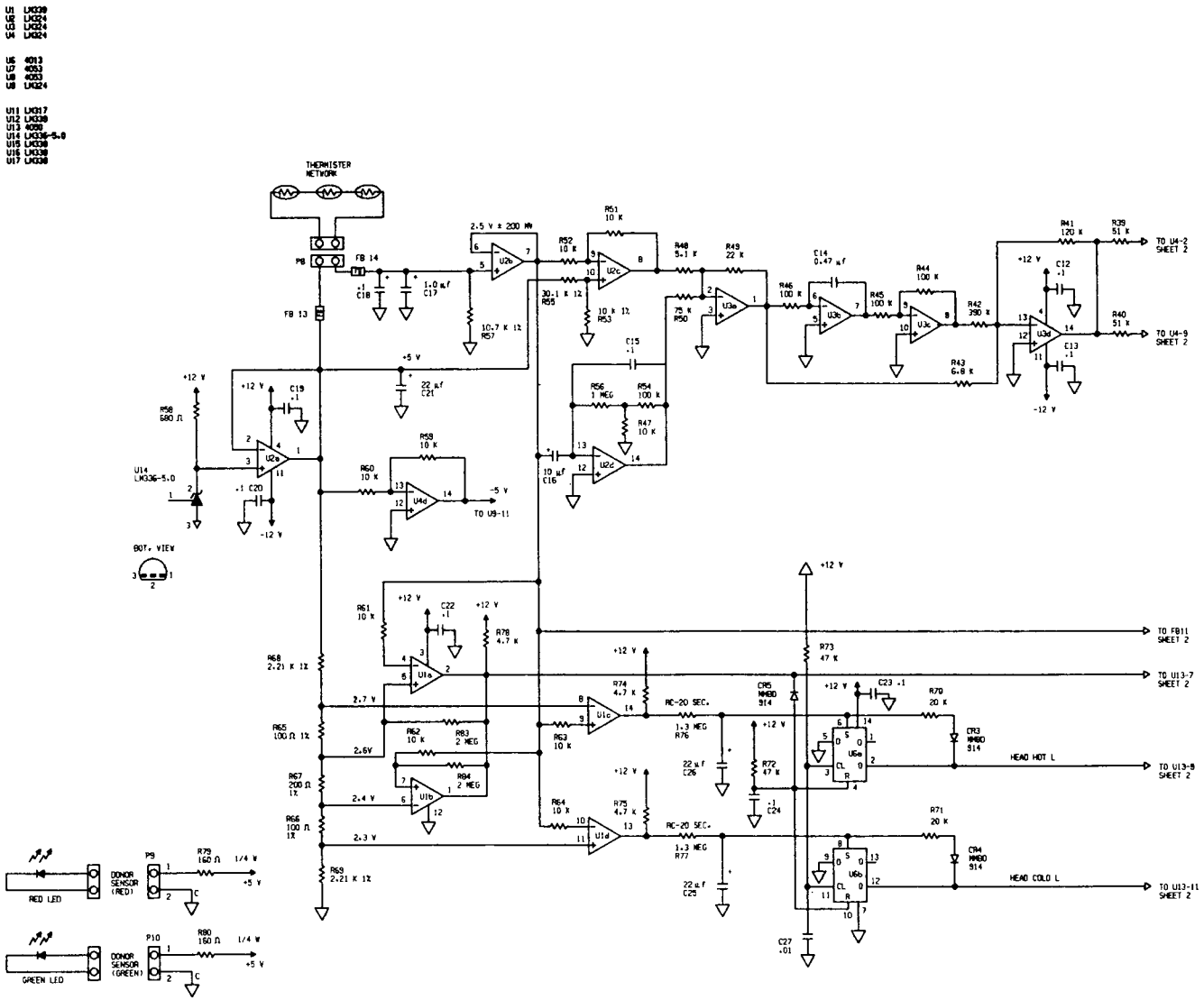

Figure 23A
PRE-HEAT DRIVER Schematic
Model 7720

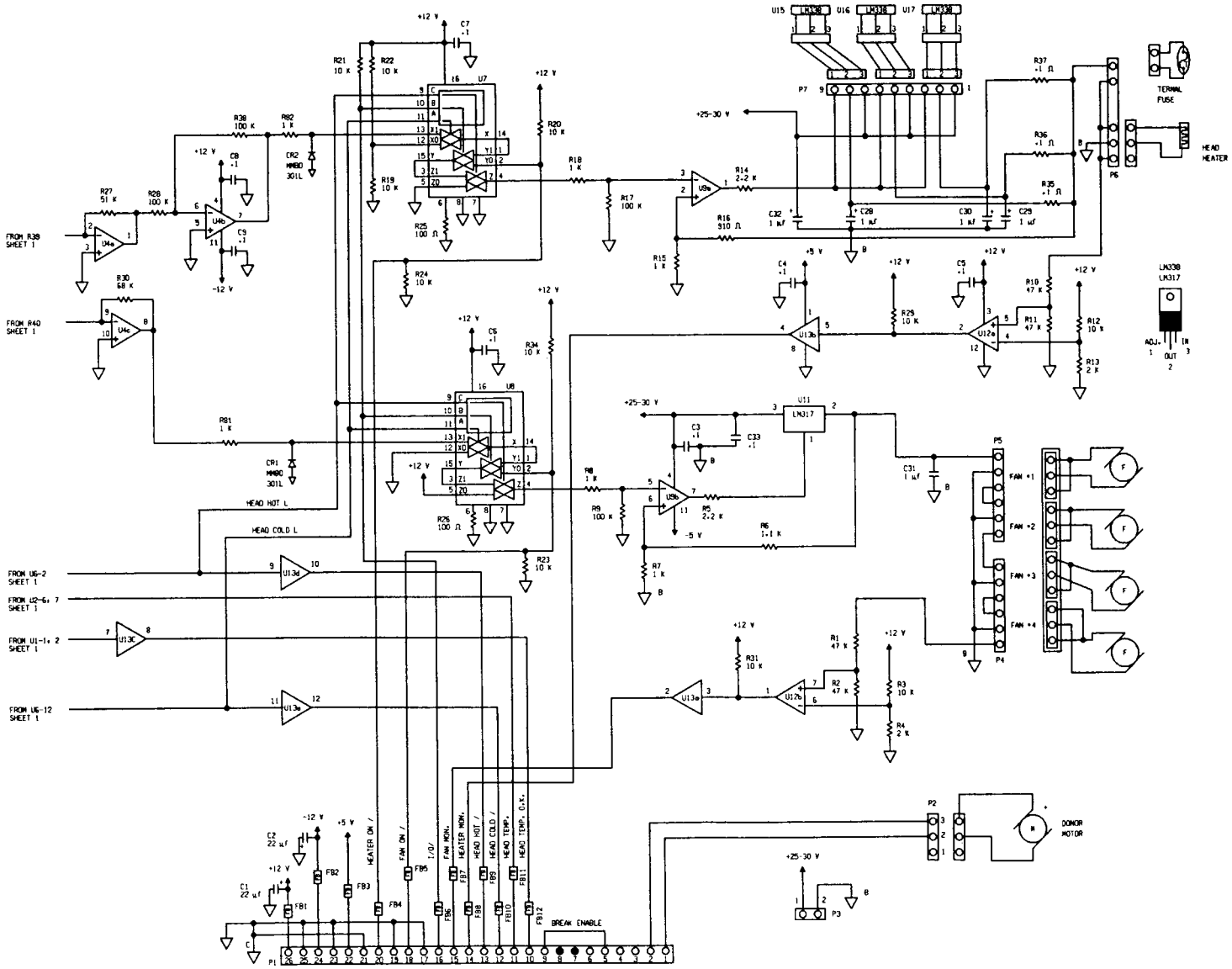

Figure 23B
PRE-HEAT DRIVER Schematic
Model 7720

NOTE: 1. 784910, CUT WINGS AT DETENTS,BOTH SIDES, BEFORE INSERTING AT PIN7 AND 8 (P1) FIG. 1

2. 122719 (SCREW), 128531 (WASHER), AND 179713 (NUT) ARE USED TO MOUNT 498310 (REG. LM317T) TO 748915 (HEATSINK). HARDWARE MUST BE TIGHTEND PRIOR TO SHIPING TO STOCK.

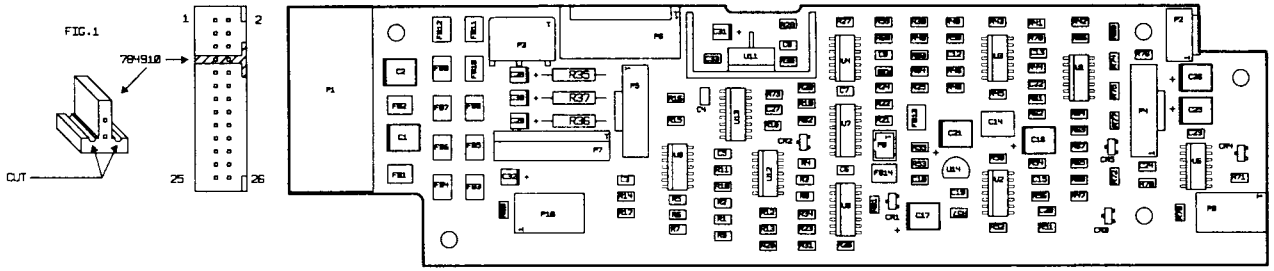

Item	Part no	Description	Quantity	
1	764906	SCHEMATIC,HEAD TEMP. CONTROL	0	
2	948661	BOARD-PC,HEAD TEMP. CONTROL	1	
3	784910	BARRIER-INSERT	1	XP1
4	764915	HEATSINK	1	XU11
5	122719	SCREW,4-40 X.25 PANHEAD	1	XU11
6	128531	WASHER	1	XU11
7	179713	NUT,4-40	1	XU11
8	273964	RESISTOR,30.1K,1/8W,1%	1	R55
9	233047	RESISTOR,160 OHM,1/4W,SMD-1206	2	R79 R80
10	233329	RESISTOR 5.1K 1/8W 5% SMD-1206	1	R48
11	233330	RESISTOR,390K,1/8W,5%,SMD-1206	1	R42
12	233333	RESISTOR,2M,1/8W,SMD-1206	2	R83 R84
13	233350	CAPACITOR,.47uF,50V,SMD-1825	1	C14
14	233924	RESISTOR,10.7K,1/8W,SMD-1206	1	R57
15	233009	RESISTOR,2K,1/8W,5%,SMD-1206	2	R4 R13
16	233813	RESISTOR,120K,1/8W,5%	1	R41
17	233841	RESISTOR,51K,1/8W,SMD-1206	3	R27 R39 R40
18	233846	20K 1/8W 5%	2	R70 R71
19	233814	RESISTOR 68K 1/8W 5% SMD-1206	1	R30
20	233848	SC 0.1UF 25V 10% S1206C	17	C3 C4 C5 C6 C7 C8 C9 C12 C13 C15 C18 C19 C20 C22 C23 C24 C33
21	234053	RESISTOR 910 OHM 1/8W 5% SMD-1206	1	R16
22	234057	IC,MC14013BD,SO-14	1	U6
23	234343	6.8K OHM 1/8W 5%	1	R43
24	237938	RESISTOR,200 OHM,1/8W,1%,SMD-1206	1	R67
25	237952	2.21K 1/8W 1%	2	R68 R69
26	237963	RESISTOR 10K 1/8W 1% SMD-1206	1	R53
27	237981	RESISTOR 100 OHM 1/8W 5% SMD-1206	2	R25 R26
28	241478	HEADER SHROUDED POLARIZED 2 POS	2	P9 P10
29	252291	RESISTOR 75K 1/8W 5% SMD-1206	1	R50
30	252345	CAPACITOR,.01uF,50V,5%	1	C27
31	252625	CAPACITOR,1uF,35V,20%,SMD-B_CASE	5	C28 C29 C30 C31 C32
32	252628	IC,MC14053BD,SO-16	2	U7 U8
33	254350	CAPACITOR,10uF,25V,SMD-CASE D	2	C16 C17
34	255314	RESISTOR 1.3M 1/8W 5% SMD-1206	2	R76 R77
35	258540	CAPACITOR,22uF,20V,SMD-CASE D	5	C1 C2 C21 C25 C26
36	263513	RESISTOR,680 OHM,1/8W,5%	1	R58
37	263534	RESISTOR 1K 1/8W 5% SMD-1206	6	R7 R8 R15 R18 R81 R82
38	263535	RESISTOR 10K 1/8W 5% SMD-1206	20	R3 R12 R19 R20 R21 R22 R23 R24 R29 R31 R34 R47 R51 R52 R59 R60 R61 R62 R63 R64 R45 R46 R54
39	263537	100K OHM 1/8W 5%	8	R9 R17 R28 R38 R44 R73
40	263539	RESISTOR 2.2K 1/8W 5%	2	R5 R14
41	263540	RESISTOR 22K 1/8W 5% RV	1	R49
42	263543	RESISTOR 4.7K 1/8W 5% SMD-1206	3	R74 R75 R78
43	263544	RESISTOR 47K 1/8W 5% RV	6	R1 R2 R10 R11 R72 R73
44	335806	CONNECTOR,MATE-N-LOCK 2 POS,LEADED	1	P3
45	337540	1M OHM 1/8W 5%	1	R56
46	498310	IC,REG,LM317T,LEADED	1	U11
47	498521	HEADER,26 POS. AMP 1-102617-1	1	P1
48	785499	IC,74HC4050 SO-16	1	U13
49	616293	MMBD914 SMD DIODE	3	CR3 CR4 CR5
50	717900	HEADER,6 POS. POLARIZED LATCHING	2	P4 P5
51	718312	IC,VOLTAGE COMPARATOR,LM339AD,SO-14	2	U1 U12
52	724934	SHIELD BEAD,FERRITE,120 OHM,100MHZ,	14	FB1 FB2 FB3 FB4 FB5 FB6 FB7 FB8 FB9 FB10 FB11 FB12 FB13 FB14
53	739506	HEADER,3 POS. POLARIZED LATCHING	1	P2
54	744634	LM336BZ,5V REFERENCE DIODE	1	U14
55	784907	HEADER,6 POS. MOLEX 41761 (PIN 3 OMITTED)	1	P6
56	784908	HEADER,STRAIGHT,2MM PITCH,LEADED	1	P8
57	784909	HEADER AMP 640456-9 9 POS STRAIGHT	1	P7
58	784911	RESISTOR,.1 OHM,1/2W,LEADED	3	R35 R36 R37
59	788485	DIODE,SCHOTTKY,MMBD301L,SMD-SOT-23	2	CR1 CR2
60	903657	IC,LINEAR OP-AMP,LM324AD,SO-14	4	U2 U3 U4 U9
61	255638	RESISTOR, 100 OHM 1/8W 1% SMD-1206	2	R65 R66
62	237987	RESISTOR, 1.1K 1/8W 5% SMD-1206	1	R6

Figure 23C
PRE-HEAT DRIVER Components
Model 7720

18 TO 20 VOLT ADJUSTABLE REGULATOR

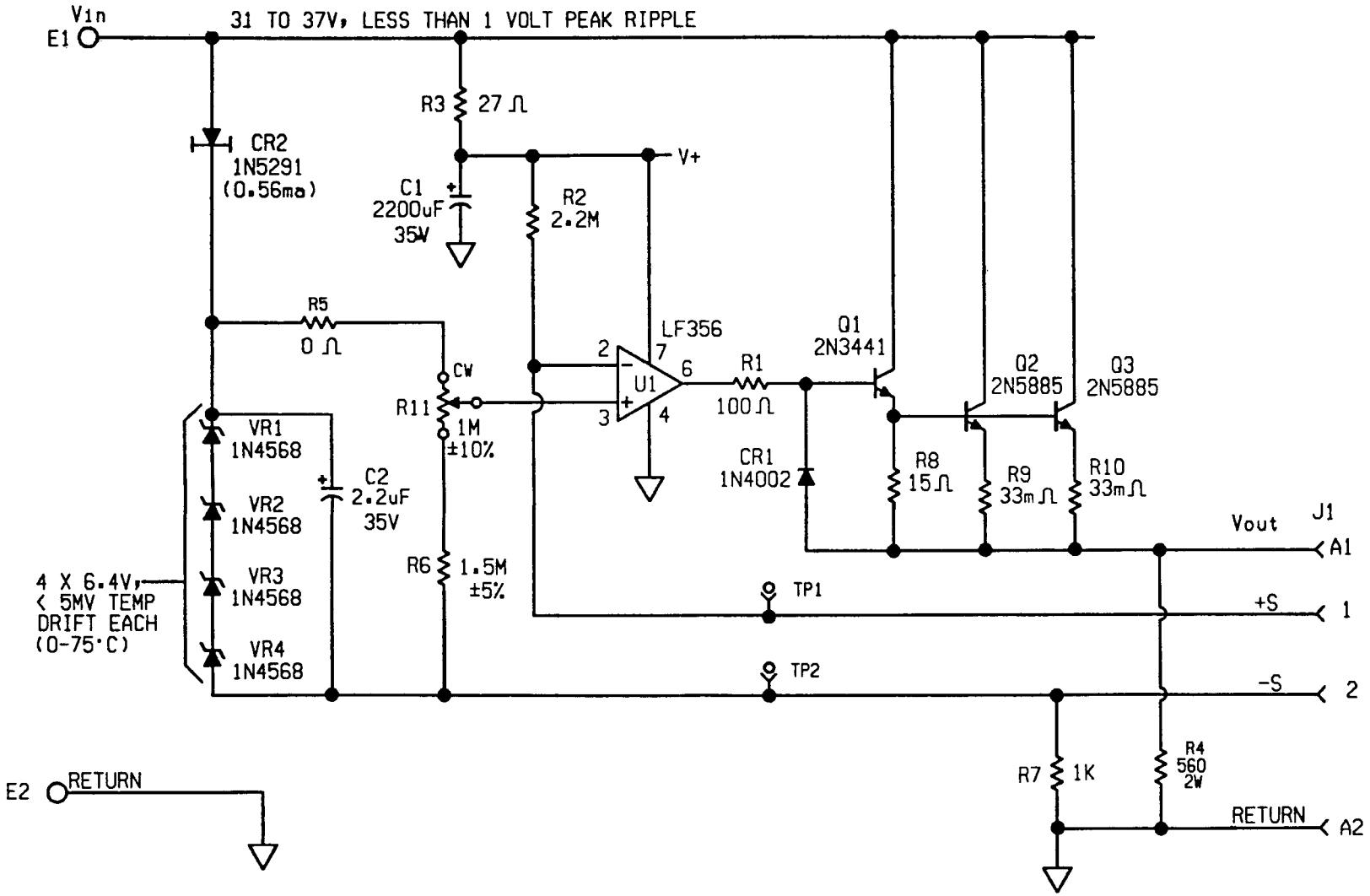

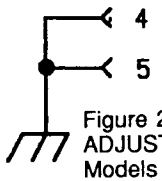

Figure 24
ADJUSTABLE REGULATOI
Models 7700 and 7720

Part No.	Description	Qty.	
744640	BOARD-PRINTED CIRCUIT	1	
191179	Diode 1N4002	1	CR1
220044	RESISTOR,1K,1/4W,5%	1	R7
223490	RESISTOR,100 OHM,1/4W,5%	1	R1
232370	CAPACITOR,2200uF,35V,20%	1	C1
257309	ZENER DIODE,1N4568	4	VR1 VR2 VR3 VR4
571820	RESISTOR,JUMPER	1	R5
337498	POT,1M 1/2W 10%	1	R11
724647	LOW PROFILE TAP 10 PIN AMP	2	E1 E2
498139	TRANSISTOR,2N3441	1	Q1
498338	IC,LF356	1	U1
498567	RESISTOR,560 OHM 2W 5%	1	R4
498806	RESISTOR,27 OHM,1/4W,5%	1	R3
531354	HORIZONTAL TEST JACK,BLACK	1	TP2
894328	HORIZONTAL TEST JACK,RED	1	TP1
593051	POWER TRANSISTOR,2N5885	2	Q2 Q3
616350	RESISTOR,2.2M,1/4W,5%	1	R2

Part No.	Description	Qty.	
616748	CAPACITOR,2.2uF,35V,20%	1	C2
655224	RESISTOR,15 OHM,1/4W,5%	1	R8
744604	RECEPTACLE,D-TYPE,7 POS.	1	J1
744652	RESISTOR,33 MILLIOHMS,5W,5%	2	R9 R10
744653	DIODE,1N5291	1	CR2
220063	RESISTOR,1.5M,1/4W,5%	1	R6
744678	HEATSINK	1	H1
179713	NUT,4-40,SMALL	10	XH1 XQ1 XQ2 XQ
105420	LOCKWASHER	10	XH1 XQ1 XQ2 XQ
128531	FLATWASHER	10	XH1 XJ1
257324	SIL-PAD,TO-66	1	XQ1
257325	SIL-PAD,TO-3	2	XQ2 XQ3
258673	PEM STUD 4-40	10	XH1 XQ1 XQ2 XQ
744608	LATCHING POST KIT	2	XJ1

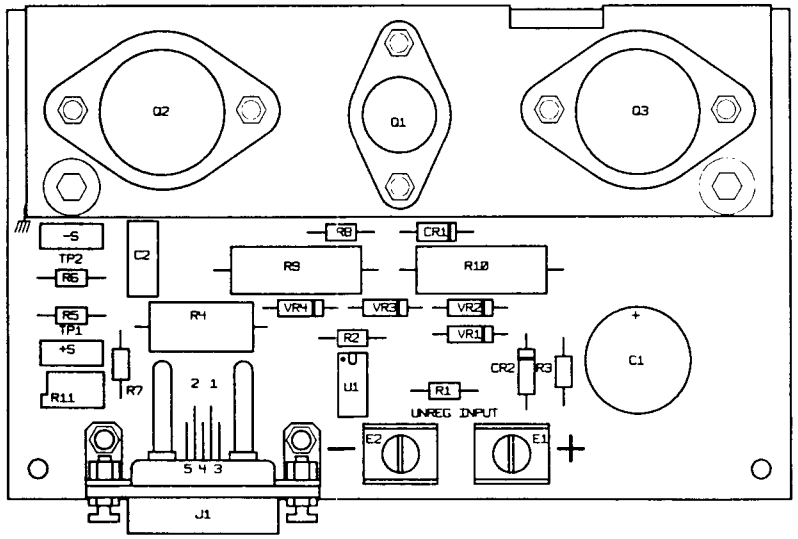

TOP SILKSCREEN LEGEND

Figure 25
ADJUSTABLE REGULATOR Compor
Models 7700 and 7720

NOTES:

1. ⏚ IS CONNECTION TO EQUIPMENT ENCLOSURE AT HEATSINK / MOUNTING BRACKET.

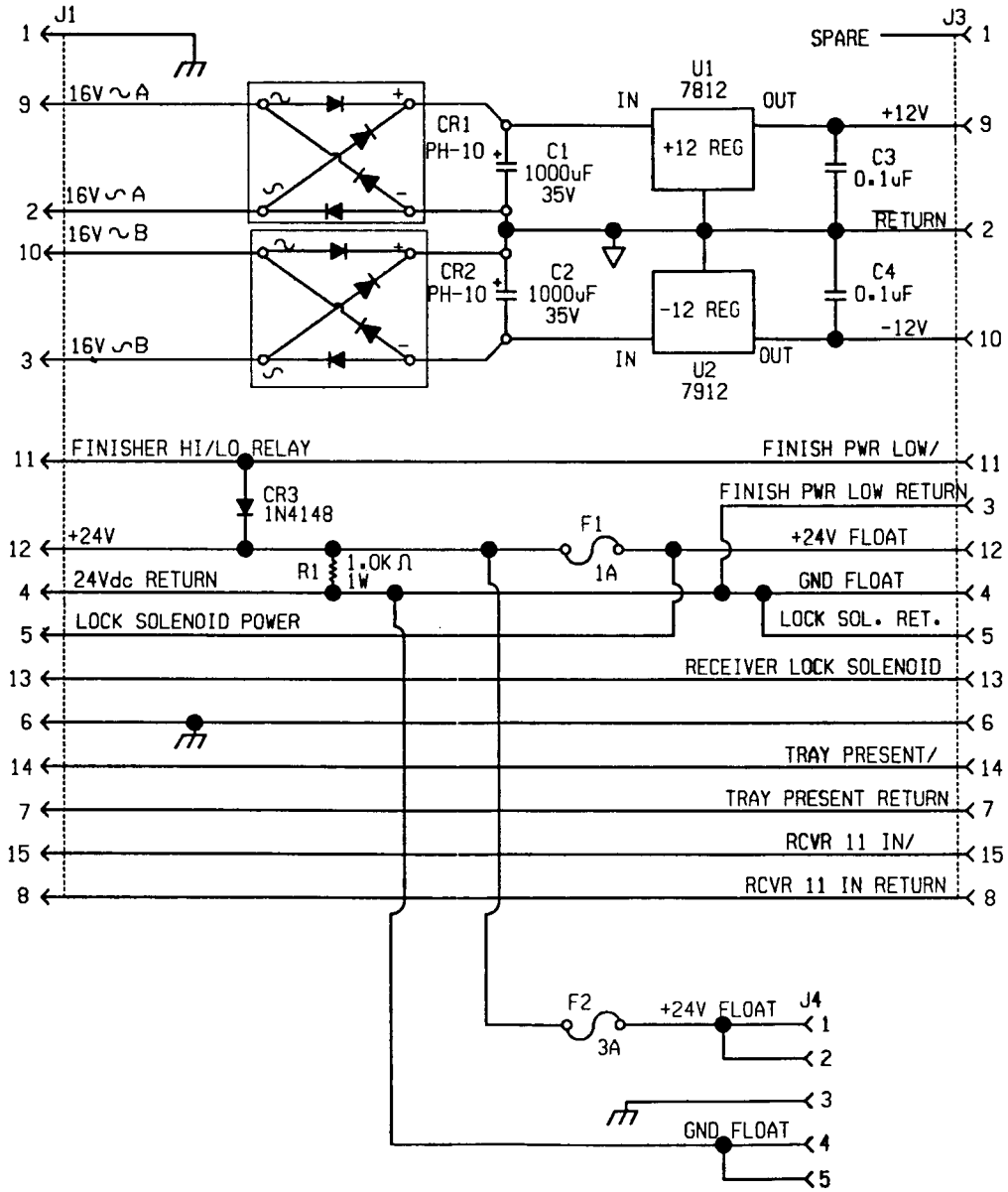

Figure 26
POWER DISTRIBUTION BOARD S
Models 7700 and 7720

Part no	Description	Quantity	
744643	BOARD-PRINTED CIRCUIT,DISTRIBUTION	1	
204274	FUSE-1 AMP	1	F1
132927	FUSE-3 AMP	1	F2
201207	CLIP-FUSE	4	XF1 XF2
243979	CAPACITOR,1000uF,35V,20%	2	C1 C2
257945	SUB MINI RECTANGULAR RECEPTACLE,STR	1	J3
480393	IC,7912,-12V REGULATOR	1	U2
549661	IC,7812,+12V REGULATOR	1	U1
253389	INSULATING PAD,TO-220	2	XU1 XU2
744603	STUD-PEM,4-40	6	XH1 XU1 XU2 XJ4

Part no	Description	Quantity	
179713	NUT,HEX,4-40,SMALL	6	XH1 XU1 X
105420	LOCKWASHER-HELICAL NO.4	6	XH1 XU1 X
128531	FLATWASHER	4	XH1 XJ4
744657	SUB MINI RECTANGULAR PLUG STRAIGHT	1	J1
744658	SUB MINI RECTANGULAR RECEPTACLE RIG	1	J4
744608	POST-LATCHING,KIT	6	XJ1 XJ3 X
744659	SINGLE PHASE FULL WAVE BRIDGE 5 A	2	CR1 CR2
895279	CAPACITOR,.1uF,100V,20%	2	C3 C4
744651	HEATSINK,DISTRIBUTION BRD	1	H1
526046	DIODE,1N4148	1	CR3
168046	RESISTOR,1K,1W,5%	1	R1

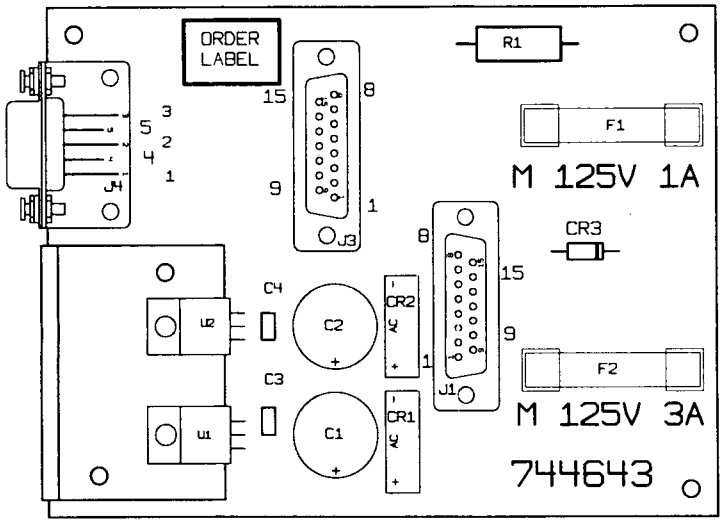

Figure 27
POWER DISTRIBUTION BOARD COMPON
Models 7700 and 7720

NOTES:

1. THE BOARD'S 4 MOUNTING HOLES ARE CONNECTED TO CHASSIS GROUND.

S1

SWITCH POSITION	COMMON TO: 1	2	4	8
0				
1	*			
2		*		
3	*	*		
4			*	
5	*		*	
6		*	*	
7	*	*	*	
8				*
9	*			*
10		*		*
11	*	*		*
12			*	*
13	*		*	*
14		*	*	*
15	*	*	*	*

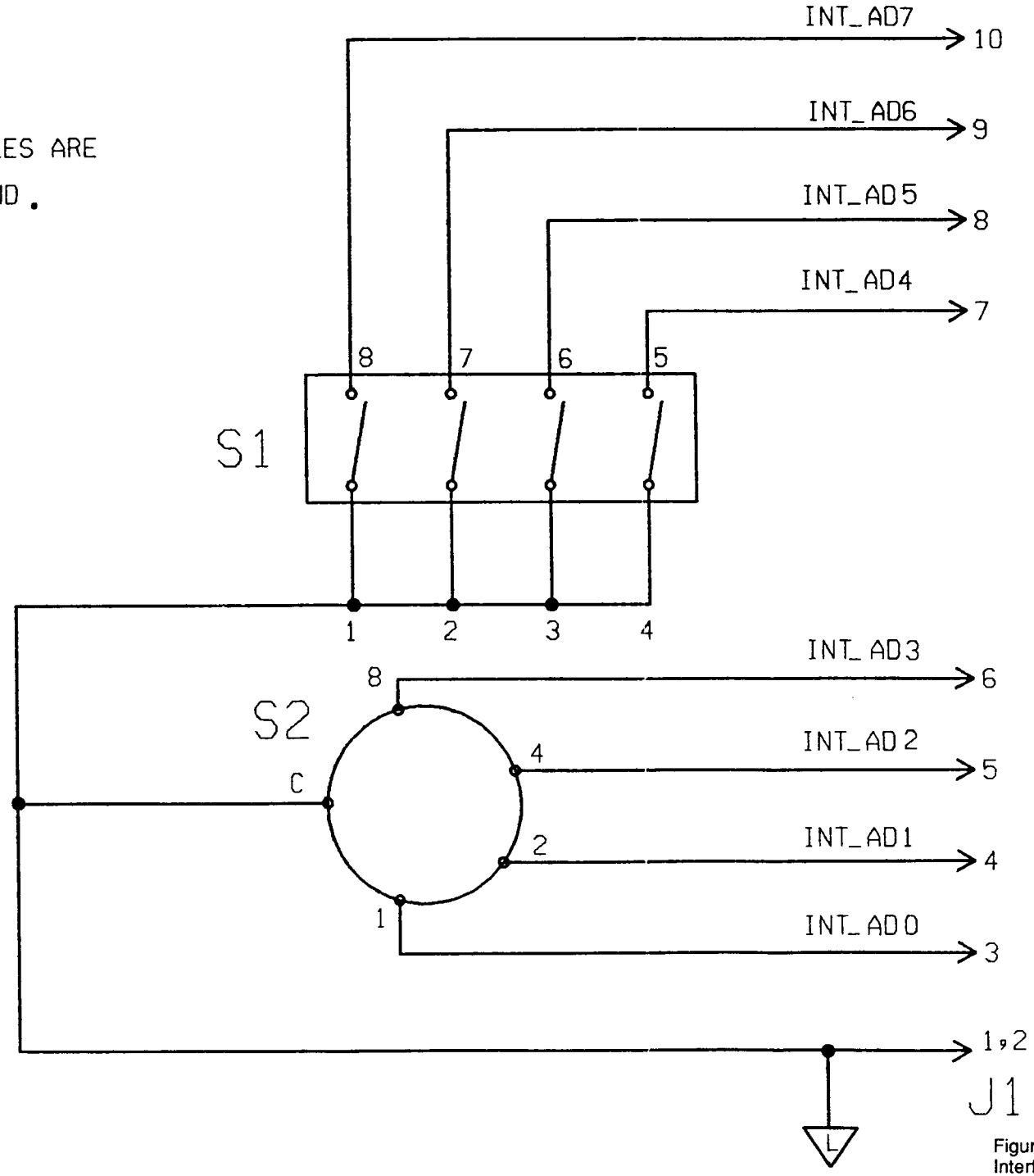

Figure 28
Interface Schem
Models 7700 ar

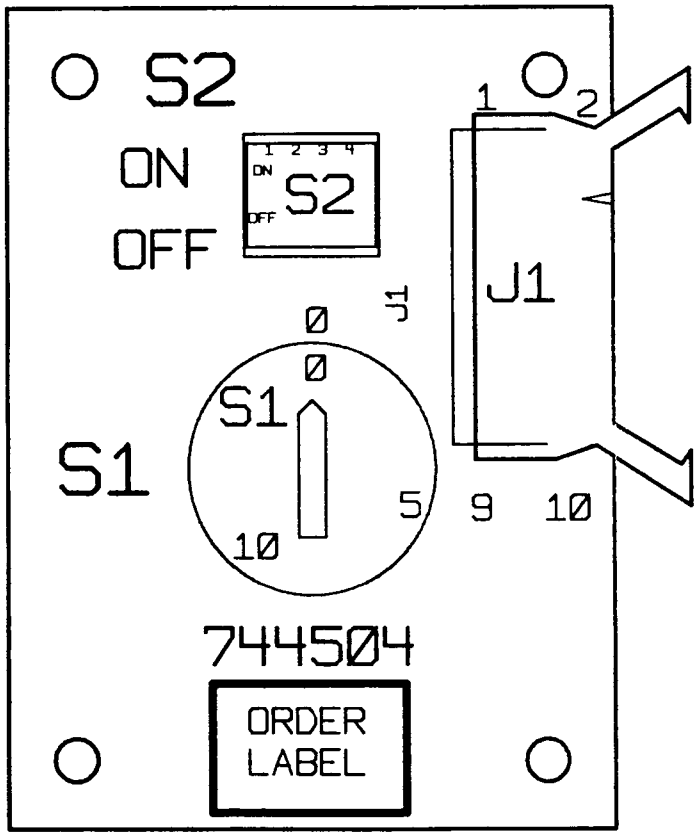

Part no	Description	Quantity	
744504	BOARD-PRINTED CIRCUIT	1	
362805	4 POS SPST DIP SWITCH	1	S2
493252	16 POS HEXADECIMAL ROTARY SWITCH	1	S1
243863	AMP UNIVERSAL EJECTION STYLE 10 PIN	1	J1
616392	LATCH,LONG,W/O PUSH PINS	2	

Figure 29
Interface Components
Models 7700 and 7720

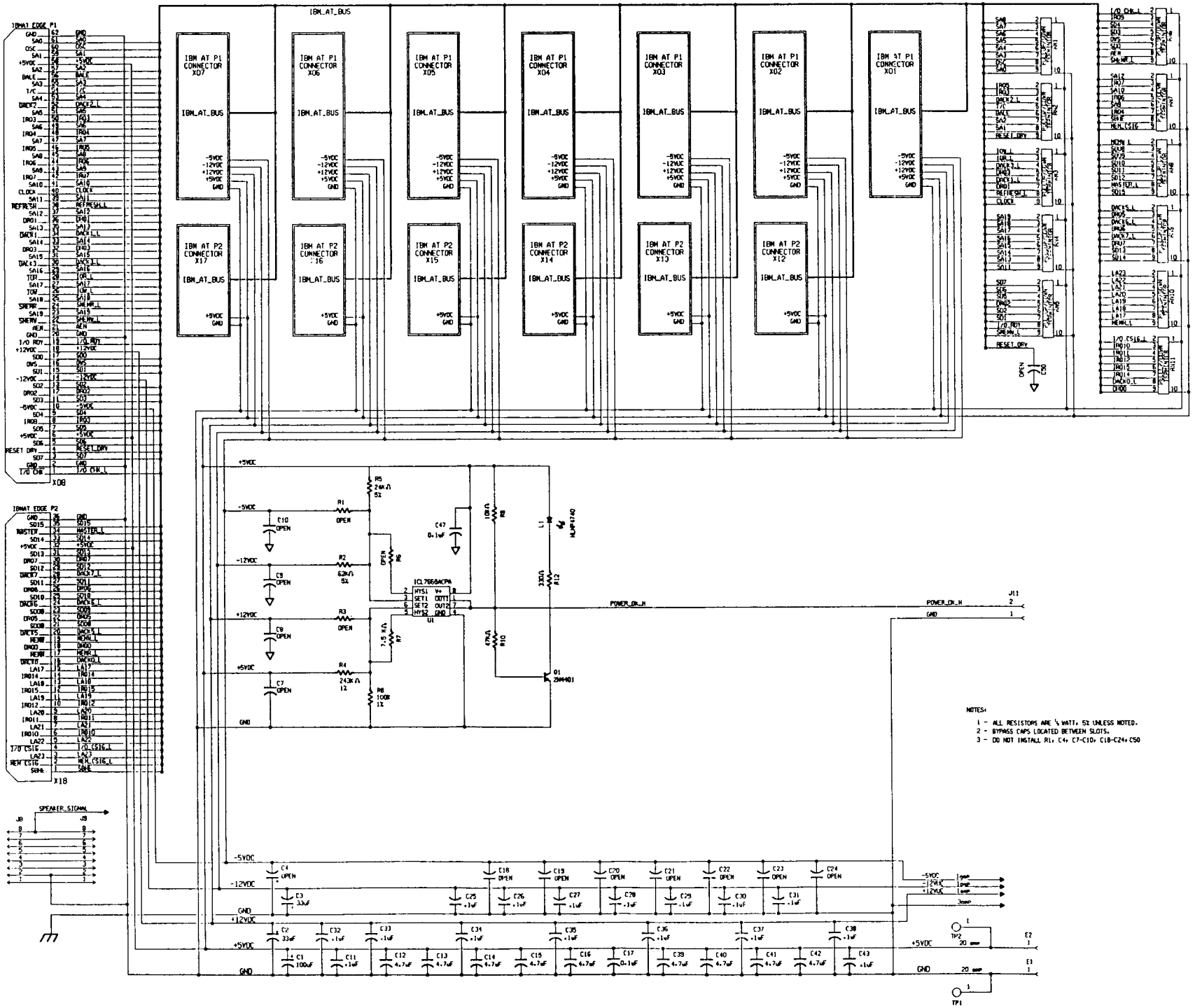

Figure 30
BACKPLANE S
Models 7700 an

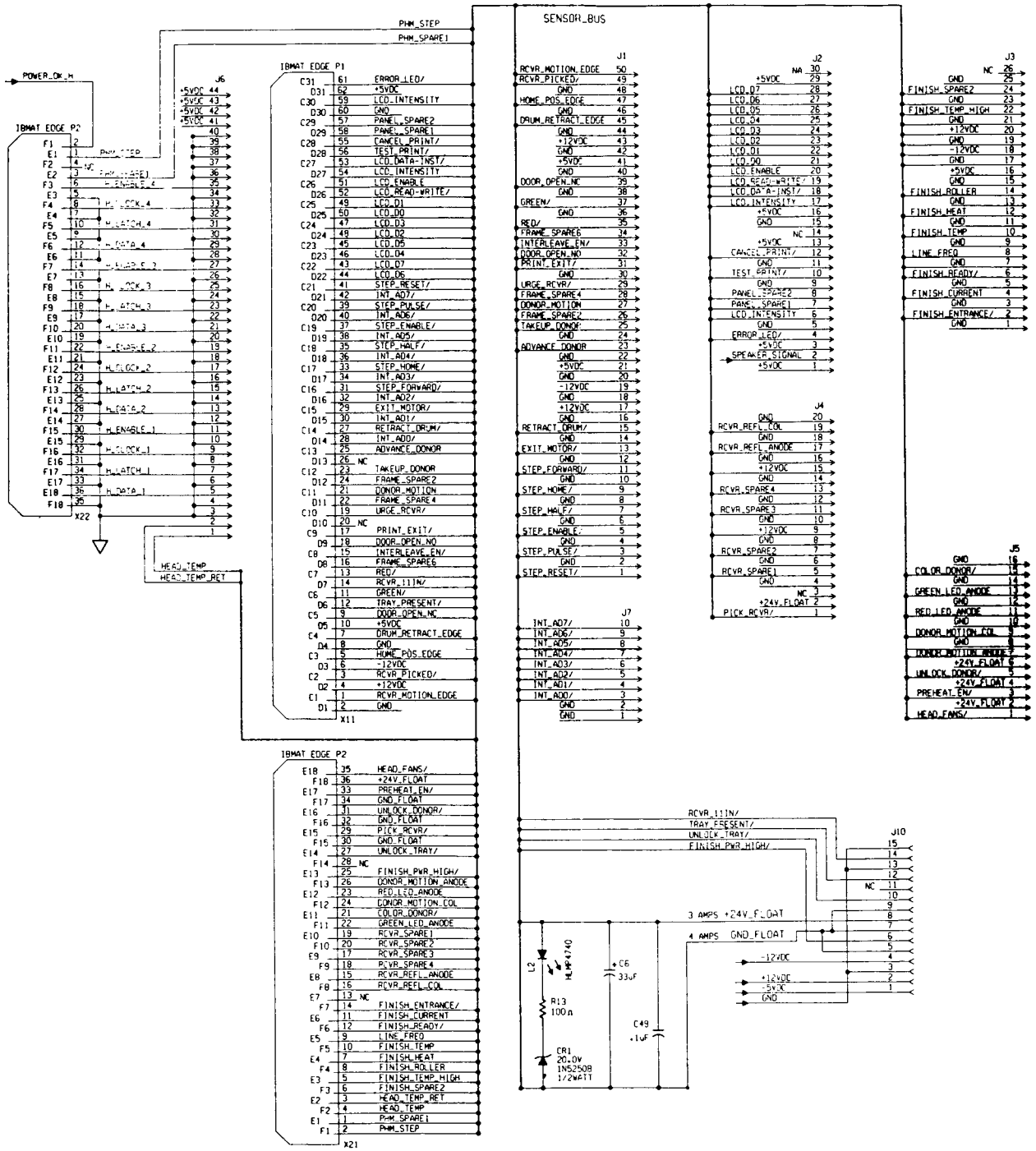

Figure 31
BACKPLANE Comp
Models 7700 and 7

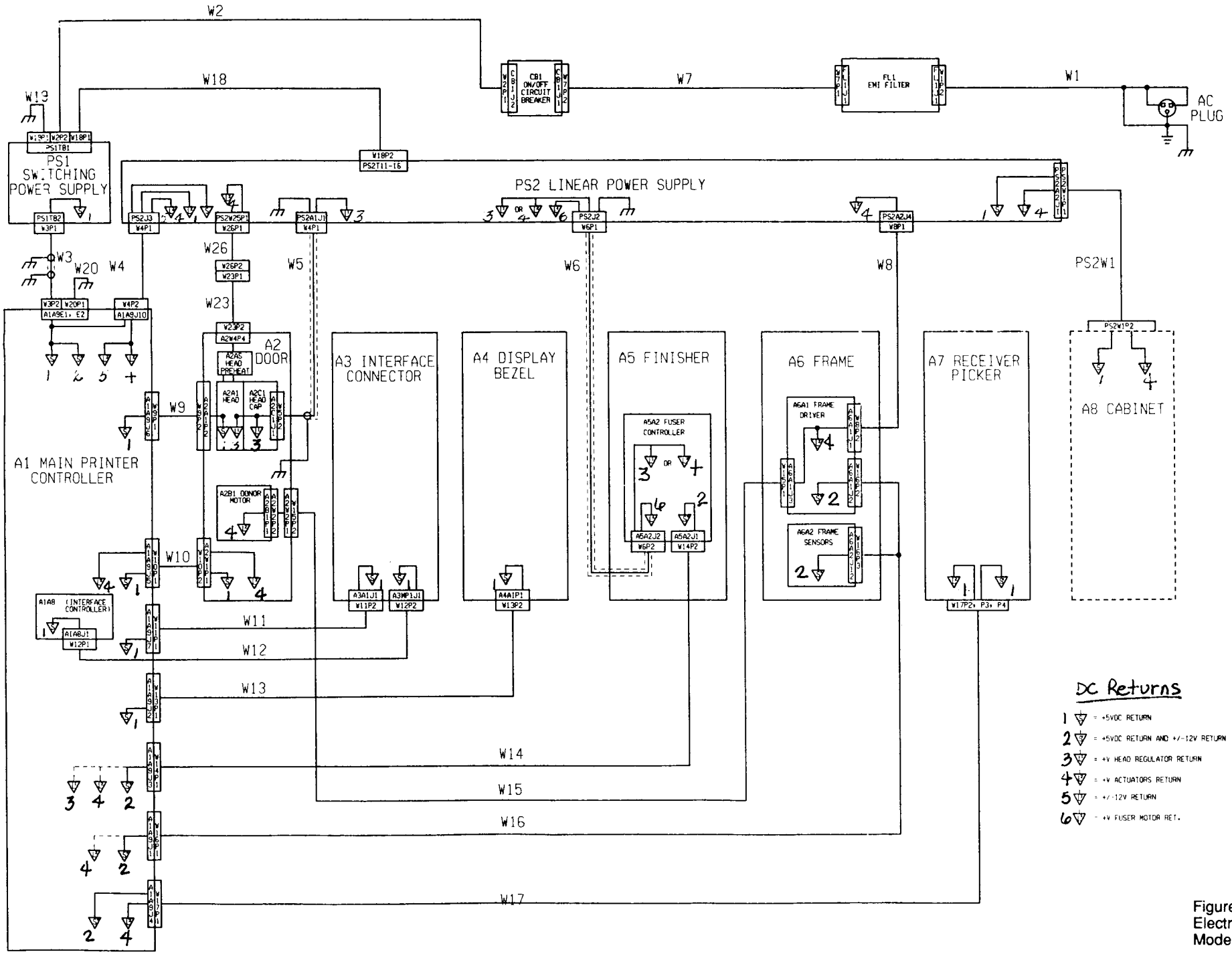

Figure 32
Electrical Interconnect
Model 7700

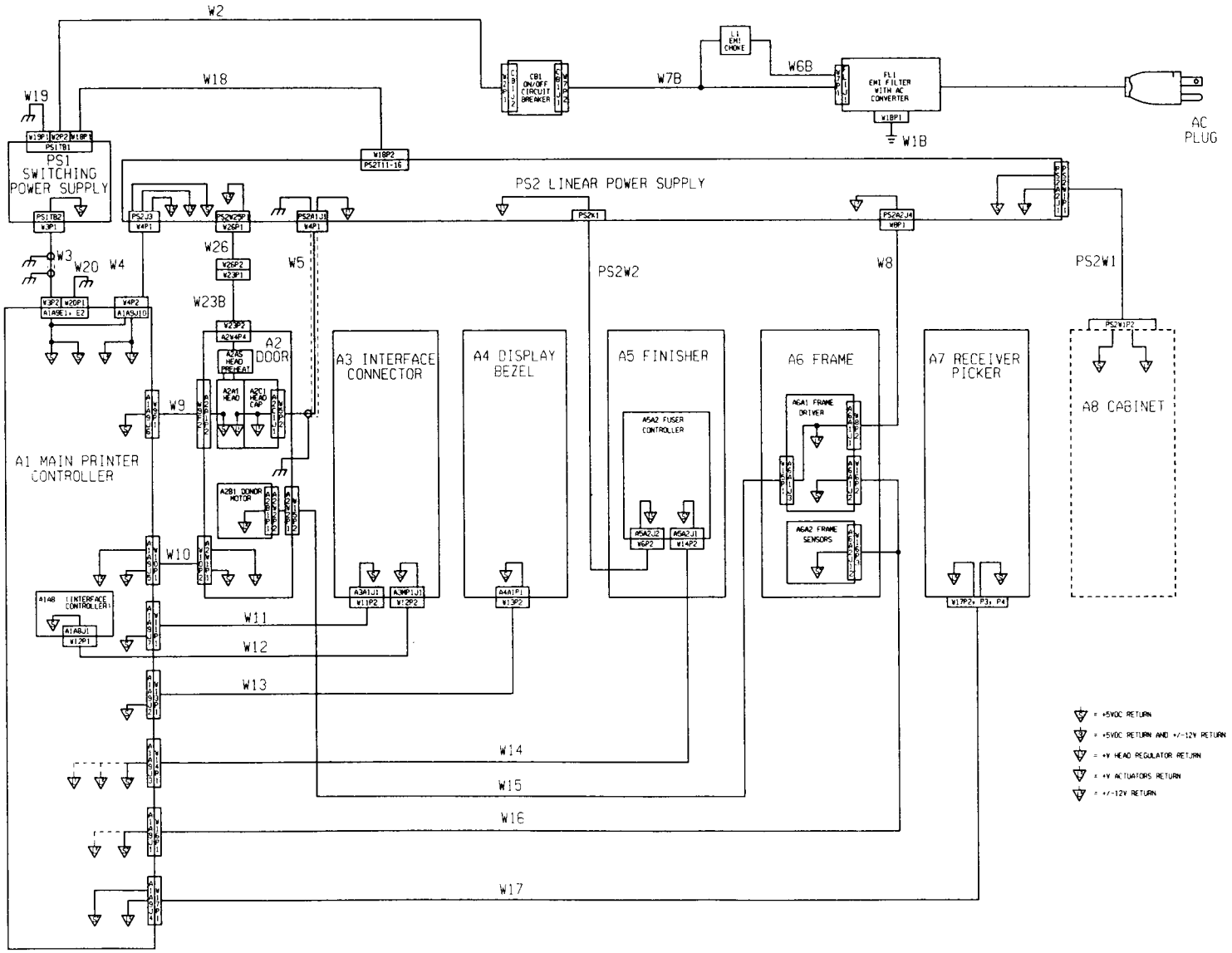

Figure 32A
Electrical Interconnect
Model 7720

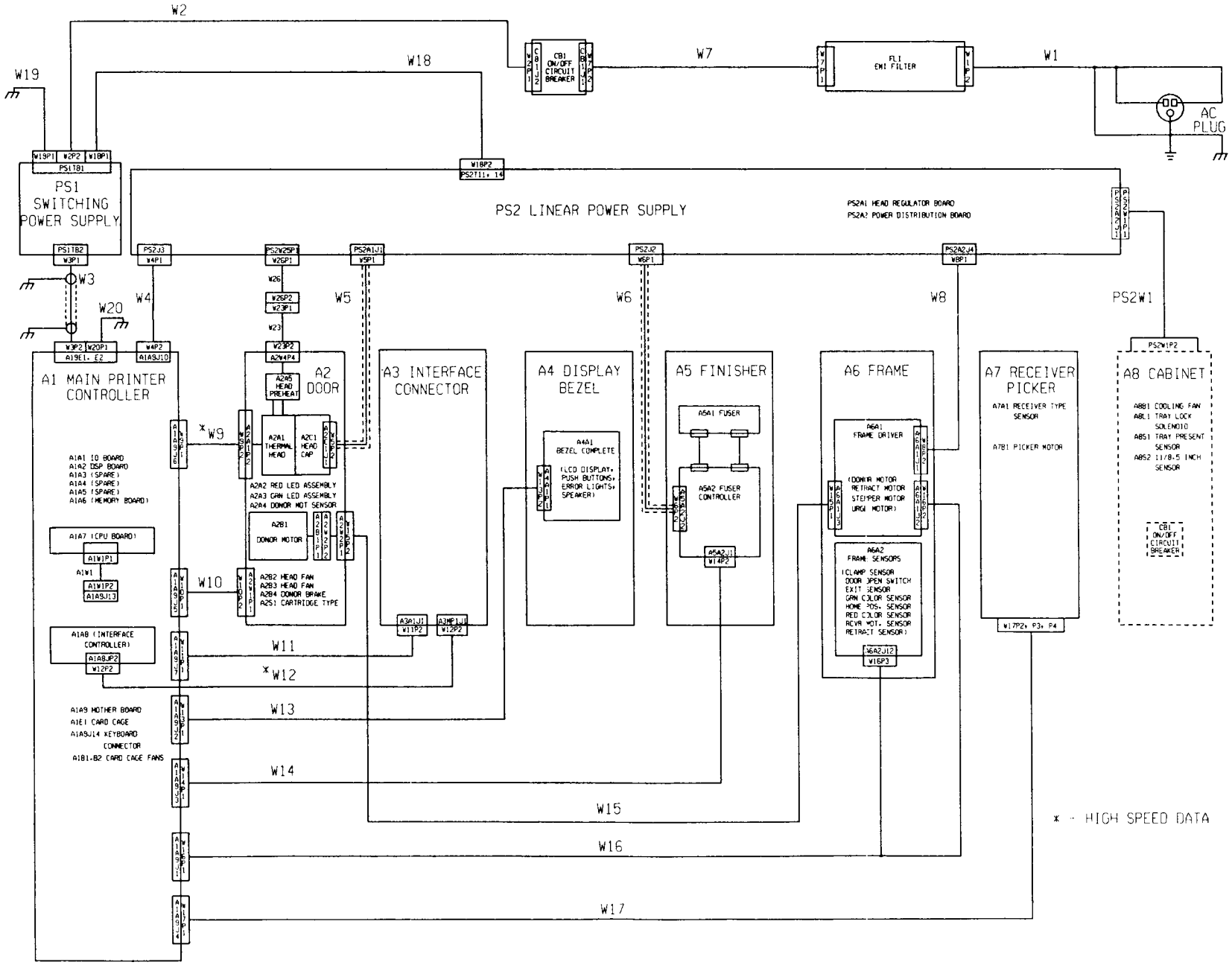

Figure 33
Signal Interconnect
Model 7700

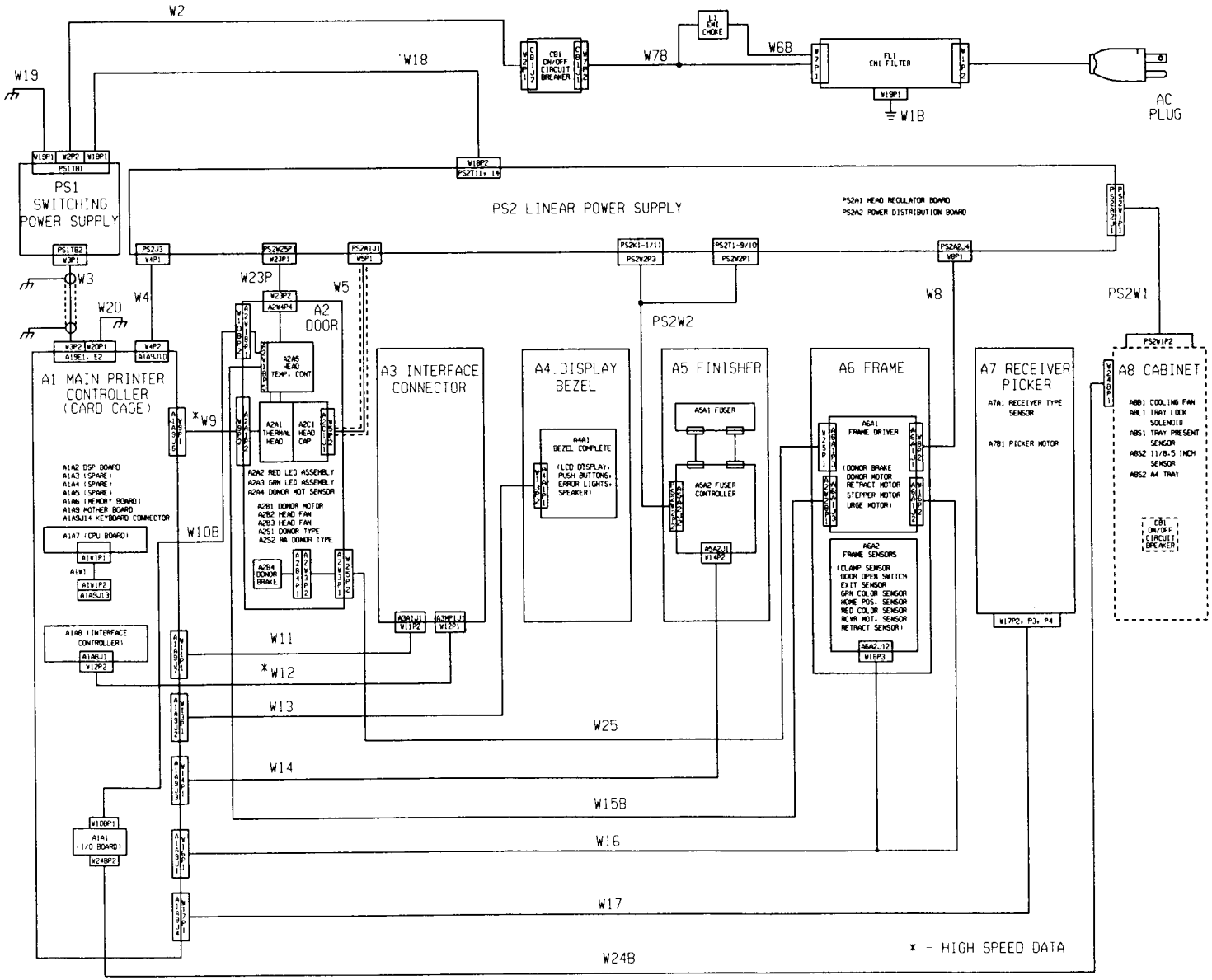

SCHEMATIC: MOTHER BOARD 257946
I/O BOARD 784902
DSP BOARD 744574

Figure 33A
Electrical Interconnect
Model 7720

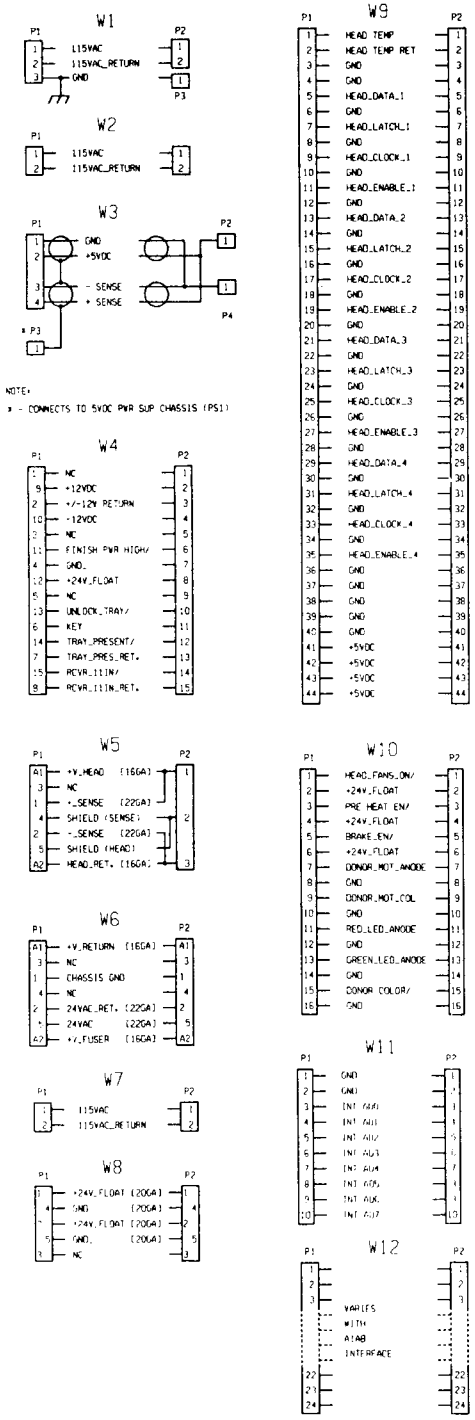

	CABLE TYPE	CONNECTORS P1	P2	P3	P4	P5	P6	NOTES KAD PART NUM.
W1	16 GAUGE 3 WIRES TWISTED PAIR	AC POWER MODULE	.250 FAST-ONS	#8 5 TOOTH RING LUG				744611
W2	16 GAUGE TWISTED PAIR	.250 FAST-ONS	#8 RING LUGS (2)					257445
W3	12GA SHIELDED TWISTED PAIR 22GA SHIELDED TWISTED PAIR	#8 RING LUGS (4)	#8 RING LUG	#6 RING LUG	#8 RING LUG			717790
W4	20 GAUGE 12 WIRES	CANNON D-TYPE DAU-15P	MOLEX SINGLE ROW 15 POSITION					744614
W5	16GA SHIELDED TWISTED PAIR 22GA SHIELDED TWISTED PAIR	CANNON D-TYPE DAM-7W2P	#10 RING LUGS (2) #6 RING LUG (1)					#10 RING LUGS ON P2-1, 3 #6 RING LUG ON P2-2 783561
W6	16 GAUGE TWISTED PAIR 22 GAUGE 3 WIRES	CANNON D-TYPE DAM-7W2P	CANNON D-TYPE DAM-7W2S					783562
W7	16 GAUGE 2 WIRES TWISTED PAIR	.250 FAST-ONS FLAGS (2)	.250 FAST-ONS (2)					717788
W8	20 GAUGE 4 WIRES TWISTED PAIR	CANNON D-TYPE DEU-5P	CANNON D-TYPE DEU-5S					744618
W9	RIBBON (44)	DOUBLE ROW SOCKET CONNECTOR 44 PIN FEM.	DOUBLE ROW SOCKET CONNECTOR 40 PIN FEM.					744619
W10	RIBBON (16)	DOUBLE ROW SOCKET CONNECTOR 16 PIN FEM.	DOUBLE ROW SOCKET CONNECTOR 16 PIN MALE					744620
W11	RIBBON (10)	DOUBLE ROW SOCKET CONNECTOR 10 PIN FEM.	DOUBLE ROW SOCKET CONNECTOR 10 PIN FEM.					744621
W12	RIBBON (24)	DOUBLE ROW CENTRONICS 24 PIN MALE	DOUBLE ROW CENTRONICS 24 PIN FEMALE					744696

Figure 34
Cable Interconnects
Model 7700

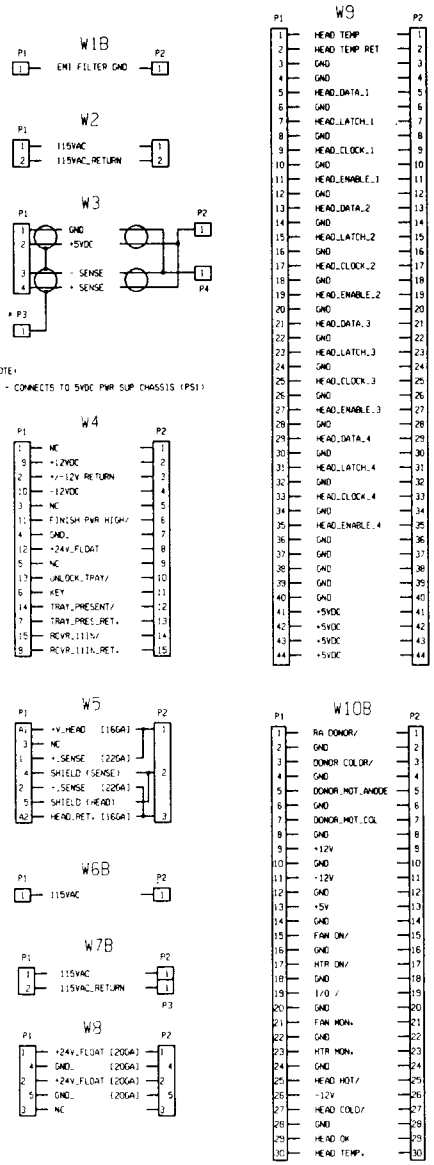

	CABLE TYPE	CONNECTORS P1	P2	P3	P4	P5	P6	NOTES KAD PART NUM.
W1B	16 GAUGE 1 WIRE	.250 FAST-ON	*8 5 TOOTH RING LUG					785455
W2	16 GAUGE TWISTED PAIR	.250 FAST-ONS	*8 RING LUGS (2)					257445
W3	12GA SHIELDED TWISTED PAIR 22GA SHIELDED TWISTED PAIR	*8 RING LUGS (4)	*8 RING LUG	*6 RING LUG	*8 RING LUG			717790
W4	20 GAUGE 12 WIRES	CANNON D-TYPE DAU-15P	MOLEX SINGLE ROW 15 POSITION					744614
W5	16GA SHIELDED TWISTED PAIR 22GA SHIELDED TWISTED PAIR	CANNON D-TYPE DAM-7W2P	*10 RING LUGS (2) *6 RING LUG (1)					*10 RING LUGS ON P2-1, 3 *6 RING LUG ON P2-2 MOLDED CABLE 782561
W6B	16 GAUGE 1 WIRE	.250 FAST-ON (1)	.187 FAST-ON (1)					785461
W7B	16 GAUGE 2 WIRES TWISTED PAIR	.250 FAST-ONS (2)	.187 FAST-ON (1)	.250 FAST-ON (1)				785460
W8	20 GAUGE 4 WIRES TWISTED PAIR	CANNON D-TYPE DEU-5P	CANNON D-TYPE DEU-5S					744618
W9	RIBBON (30)	DOUBLE ROW SOCKET CONNECTOR 44 PIN FEM.	DOUBLE ROW SOCKET CONNECTOR 40 PIN FEM.					744619
W10B	RIBBON (30)	DOUBLE ROW SOCKET CONNECTOR 30 PIN FEM.	DOUBLE ROW SOCKET CONNECTOR 30 PIN MALE					785456
W11	RIBBON (10)	DOUBLE ROW SOCKET CONNECTOR 10 PIN FEM.	DOUBLE ROW SOCKET CONNECTOR 10 PIN FEM.					744621
W12	RIBBON (24)	DOUBLE ROW CENTRONICS 24 PIN MALE	DOUBLE ROW CENTRONICS 24 PIN FEMALE					744696

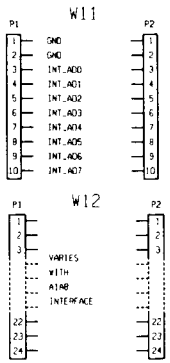

Figure 34A
Cable Interconnects
Model 7720

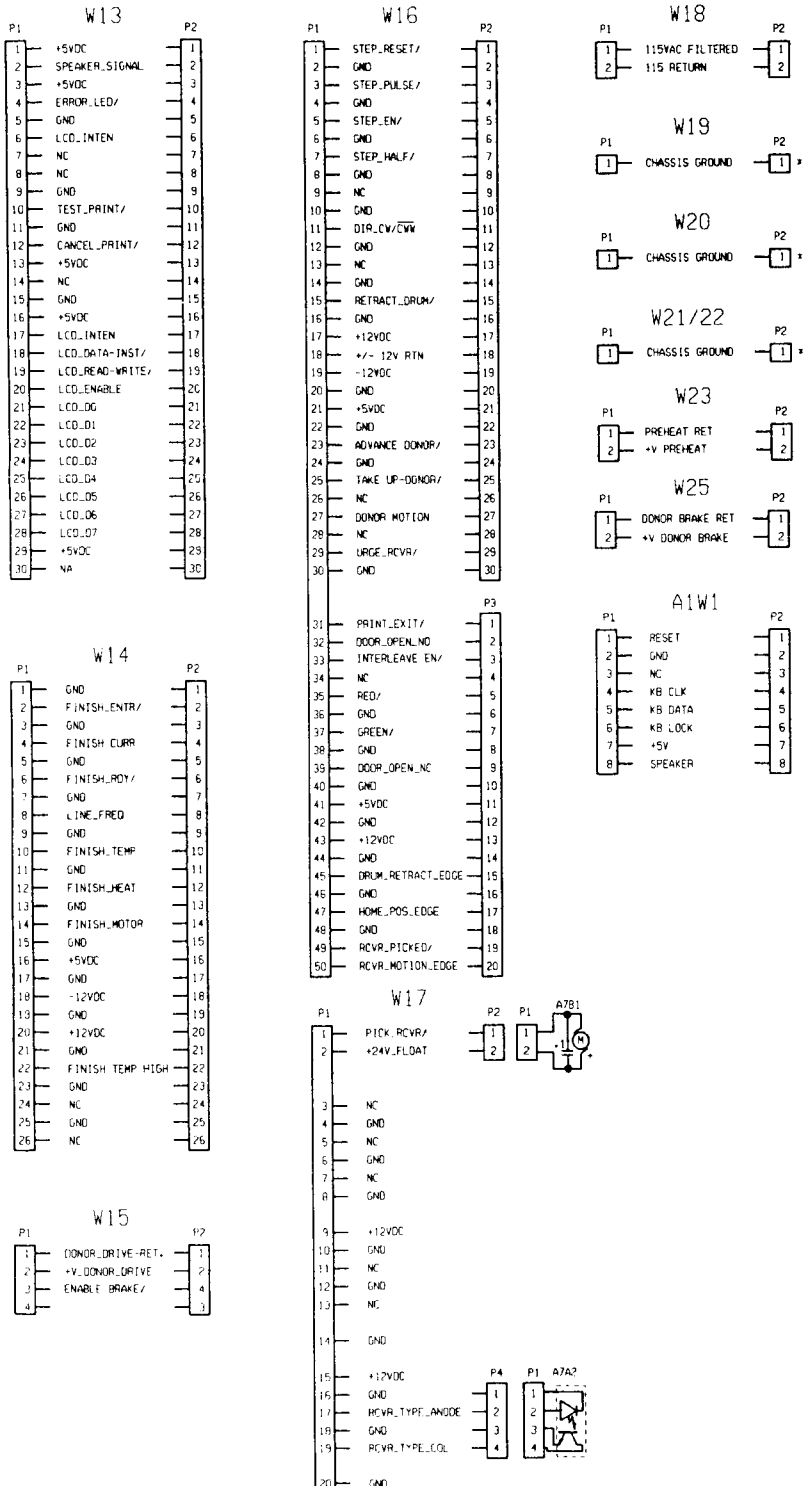

	CABLE TYPE	CONNECTORS P1	P2	P3	P4	NOTES KAD PART NUM.
W13	RIBBON (30)	DOUBLE ROW SOCKET CONNECTOR 30 PIN FEM.	DOUBLE ROW SOCKET CONNECTOR 30 PIN MALE			744623
W14	RIBBON (26)	DOUBLE ROW SOCKET CONNECTOR 26 PIN FEM.	DOUBLE ROW SOCKET CONNECTOR 26 PIN FEM.			744624
W15	22 GAUGE (1) TWISTED PAIR (1) SINGLE WIRE	AMP MTA SERIES 4 PIN FEM.	AMP MODU MTE SERIES 4 PIN MALE			744625
W16	RIBBON (50) TWISTED PAIR	DOUBLE ROW SOCKET CONNECTOR 50 PIN FEM.	DOUBLE ROW SOCKET CONNECTOR 30 PIN FEM.	DOUBLE ROW SOCKET CONNECTOR 20 PIN FEM.		744626
W17	24 GAUGE 10 WIRES	AMP MODU DOUBLE ROW 20 PIN FEM.	AMP MODU MTE SERIES 3 PIN MALE		AMP MODU MTE SERIES 4 PIN MALE	744627
W18	16 GAUGE 2 WIRES	.250 FAST-ONS	#8 RING LUG (2)			717658
W19	16 GAUGE 1 WIRE	#8 RING LUG	#8 RING LUG			717659
W20	7/32" BRAID	#6 RING LUG	#8 RING LUG			P1 IS CONNECTED TO A1A9E1 257942
W21/22	ALUM STRIP	#6 SCREW HOLE	#6 SCREW HOLE			257943
W23	16 GAUGE TWISTED PAIR	MOLEX 1545 SERIES 2 PIN FEMALE	MOLEX 1545 SERIES 2 PIN MALE			258397
W25	22 GAUGE TWISTED PAIR	MTA SERIES 2 PIN FEMALE	AMP MODU MTE SERIES 2 PIN MALE			258766
A1W1	RIBBON (8)	AMP MTA SERIES 8 PIN FEMALE	AMP MTA SERIES 8 PIN FEMALE			744656

Figure 35
Cable Interconnects
Model 7700

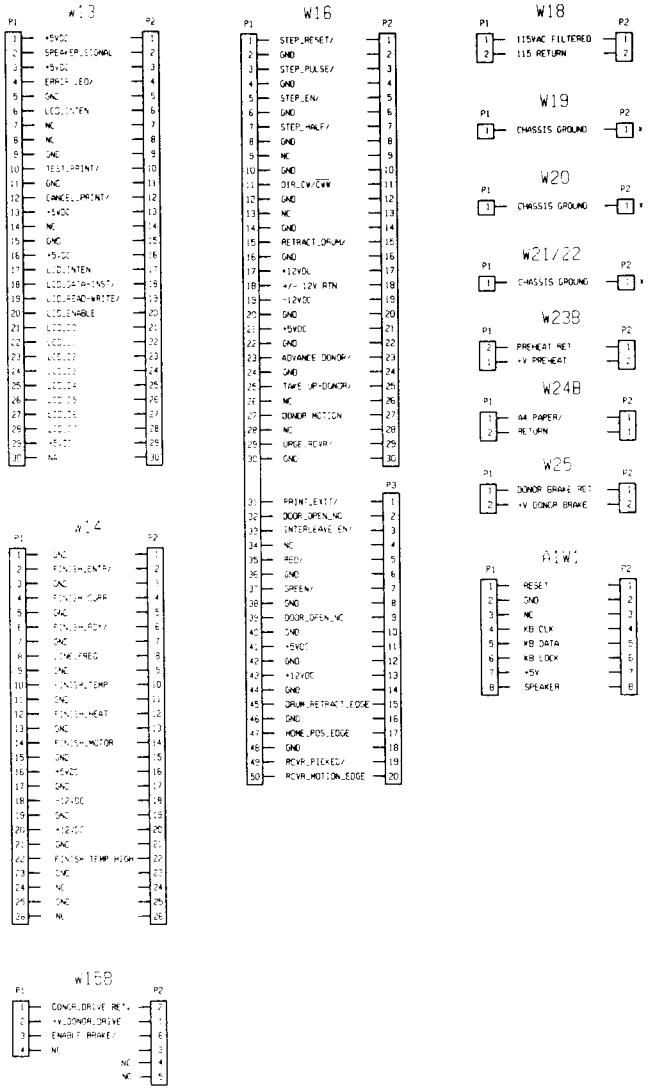

	CABLE TYPE	CONNECTORS P1	P2	P3	P4	NOTES KAD PART NUM.
W13	RIBBON (30)	DOUBLE ROW SOCKET CONNECTOR 30 PIN FEM.	DOUBLE ROW SOCKET CONNECTOR 30 PIN MALE			744623
W14	RIBBON (26)	DOUBLE ROW SOCKET CONNECTOR 26 PIN FEM.	DOUBLE ROW SOCKET CONNECTOR 26 PIN FEM.			744624
W15B	22 GAUGE (1) TWISTED PAIR (1) SINGLE WIRE	AMP MTA SERIES 4 PIN FEM.	AMP MODU MOD IV 4 PIN FEM.			784913
W16	RIBBON (50)	DOUBLE ROW SOCKET CONNECTOR 50 PIN FEM.	DOUBLE ROW SOCKET CONNECTOR 30 PIN FEM.	DOUBLE ROW SOCKET CONNECTOR 20 PIN FEM.		744626
W18	16 GAUGE 2 WIRES	.250 FAST-ONS	#8 RING LUG (2)			717658
W19	16 GAUGE 1 WIRE	#8 RING LUG	#8 RING LUG			717659
W20	7/32" BRAID	#6 RING LUG	#8 RING LUG			P1 IS CONNECTED TO A1A9E1 (5V GND, MOTHER BD) 257942
W21/22	ALUM STRIP	#6 SCREW HOLE	#6 SCREW HOLE			257943
W23B	16 GAUGE TWISTED PAIR	MOLEX 1545 SERIES 2 PIN FEMALE	AMP M-N-L 2 PIN FEM.			784914
W24B	24 GAUGE TWISTED PAIR	AMP MODU MTE 2 PIN FEM.	.110 FASTON (2)			785457
W25	22 GAUGE TWISTED PAIR	MTA SERIES 2 PIN FEMALE	AMP MODU MTE SERIES 2 PIN MALE			258766
A1W1	RIBBON (8)	AMP MTA SERIES 8 PIN FEMALE	AMP MTA SERIES 8 PIN FEMALE			744656

Figure 35A
Cable Interconnects
Model 7720

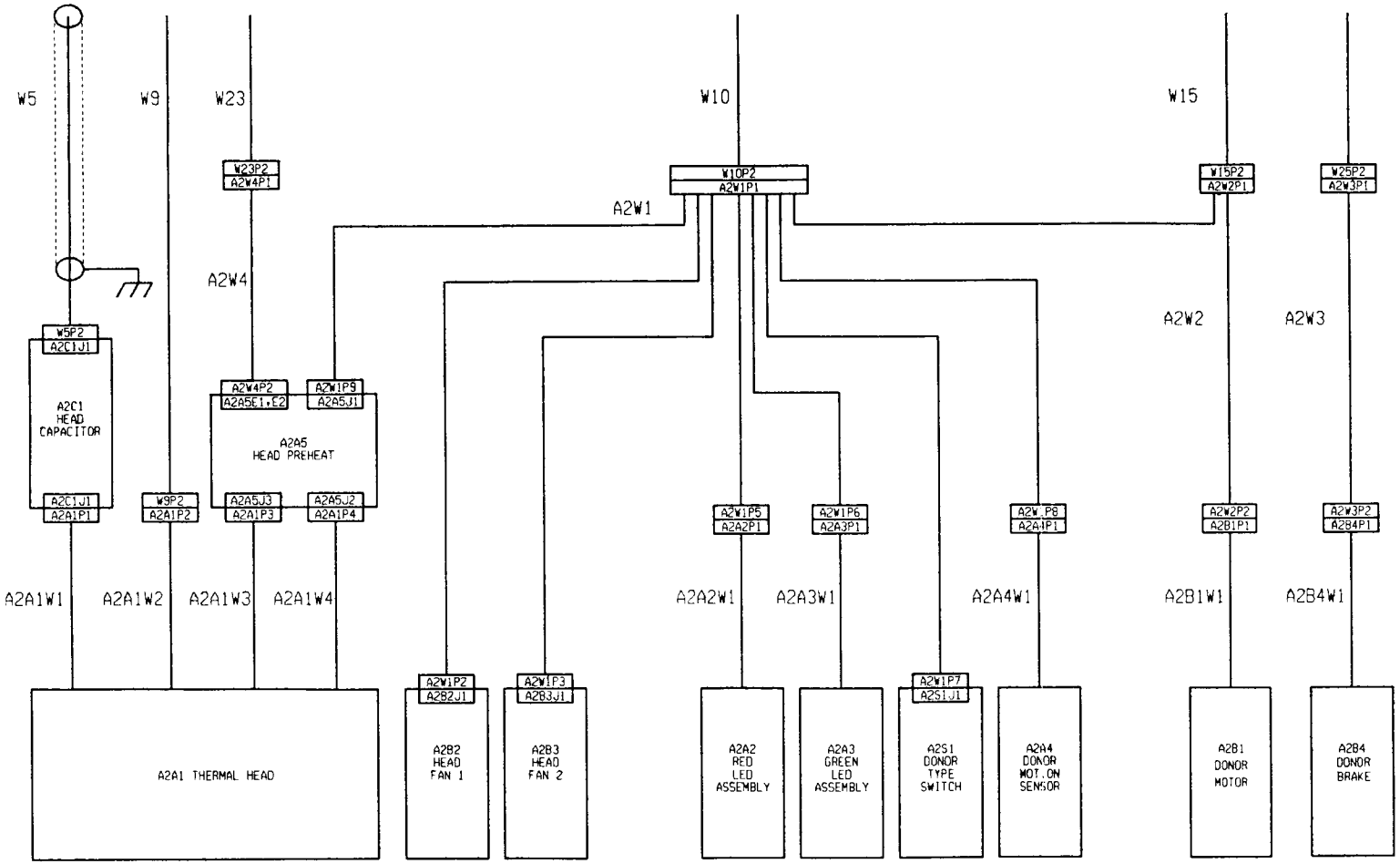

Figure 36
FRONT DOOR Interconnects
Model 7700

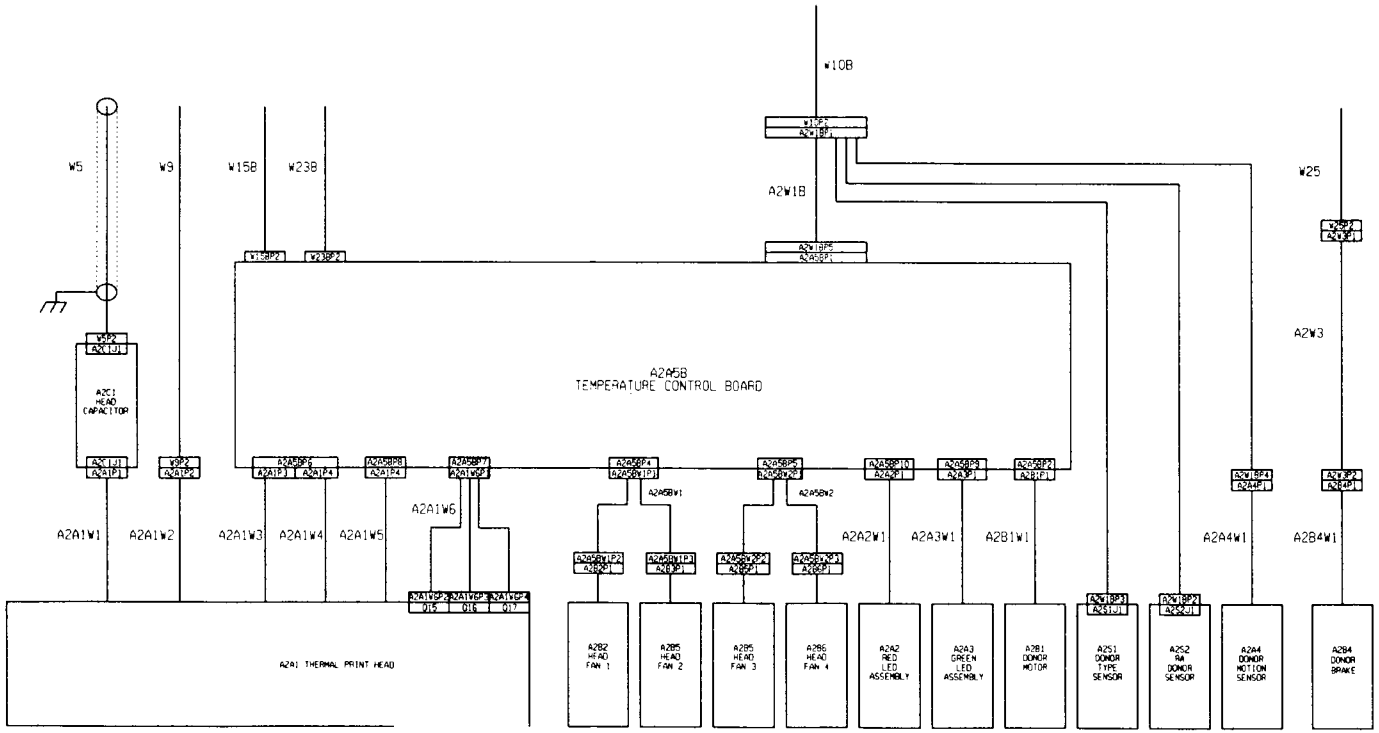

SCHEMATIC: HEAD PREHEAT 258706

Figure 36A
FRONT DOOR Interconnects
Model 7720

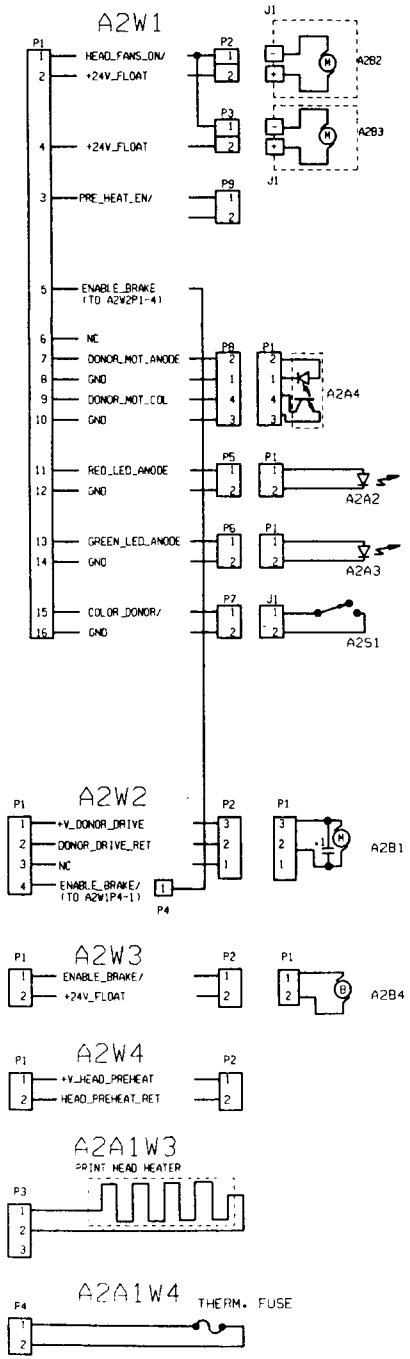

	CABLE TYPE	CONNECTORS P1	P2	P3	P4	P5	P6	P7	P8	P9	NOTES KAO PART NUM.
A2W1	26 GAUGE 12 WIRES	AMP MODU DOUBLE ROW 16 PIN FEM.	.110 FAST-ON (2)	.110 FAST-ON (2)	AMP MTE CRIMP TERMINAL	AMP MODU MTE SERIES 2 PIN MALE	AMP MODU MTE SERIES 2 PIN MALE	.110 FAST-ON (2)	AMP MODU MTE SERIES 4 PIN MALE	AMP MODU MTE SERIES 2 PIN FEMALE	744629
A2W2	22 GAUGE (3) WIRE (1) SINGLE (1) TWISTED	AMP MODU MTE SERIES 4 PIN MALE	AMP MODU MTE SERIES 3 PIN FEM.	#6 RING LUG							744630
A2W3	22 GAUGE TWISTED PAIR	AMP MODU MTE SERIES 2 PIN FEMALE	AMP MODU MTE SERIES 2 PIN MALE								258770
A2W4	16 GAUGE TWISTED PAIR	MOLEX 2 PIN MALE	#6 RING LUG (2)								258493

Figure 37
FRONT DOOR Interconne
Model 7700

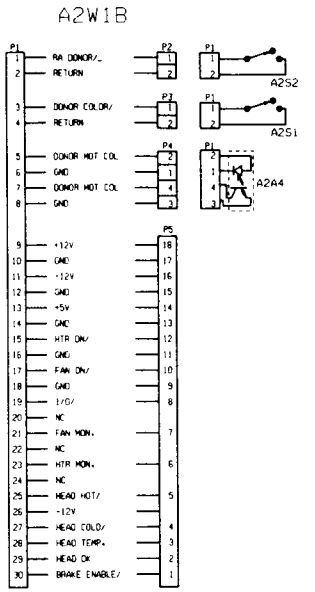

	CABLE TYPE	CONNECTORS P1	P2	P3	P4	P5					NOTES KAD PART NUM.
A2W1B	24 GAUGE 24 WIRES	AMP MODU DOUBLE ROW 30 PIN FEM.	.110 FAST-ON (2)	.110 FAST-ON (2)	AMP MODU MTE SERIES 4 PIN MALE	AMP MODU MOD IV 18 PIN FEM.					784912
A2W3	22 GAUGE TWISTED PAIR	AMP MODU MTE SERIES 2 PIN FEMALE	AMP MODU MTE SERIES 2 PIN MALE								258770

	CABLE TYPE	CONNECTORS P1	P2	P3	P4						NOTES KAD PART NUM.
A2A1W6B	24 GAUGE 9 WIRES	AMP MTA SERIES 9 PIN FEMALE	AMP MTA SERIES 3 PIN FEMALE	AMP MTA SERIES 3 PIN FEMALE	AMP MTA SERIES 3 PIN FEMALE						785458
A2A5BW1	24 GAUGE 6 WIRES	AMP MODU MTE SERIES 6 PIN FEMALE	MOLEX 1625 SERIES 3 PIN RECPT	MOLEX 1625 SERIES 3 PIN RECPT							785465

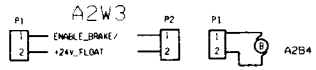

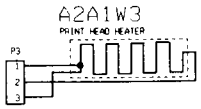

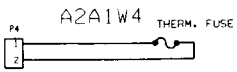

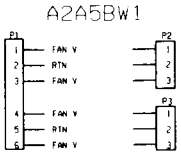

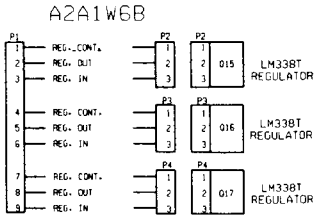

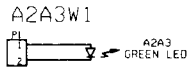

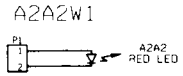

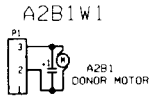

Figure 37A
FRONT DOOR Interconnects
Model 7720

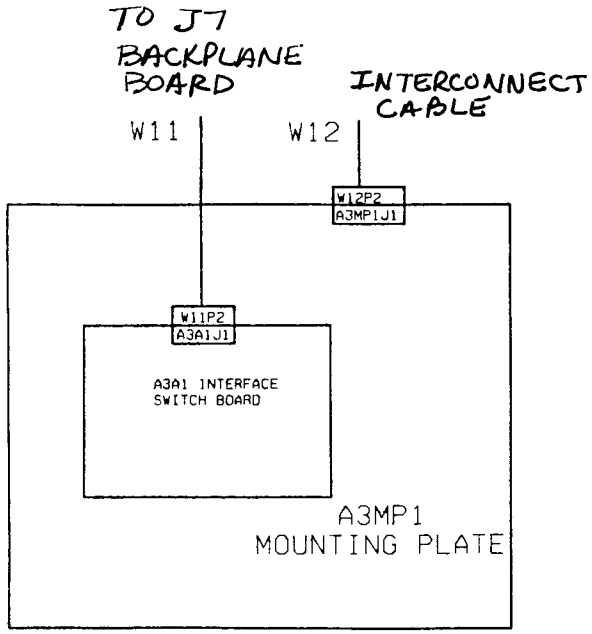

A3 INTERFACE ASSEMBLY

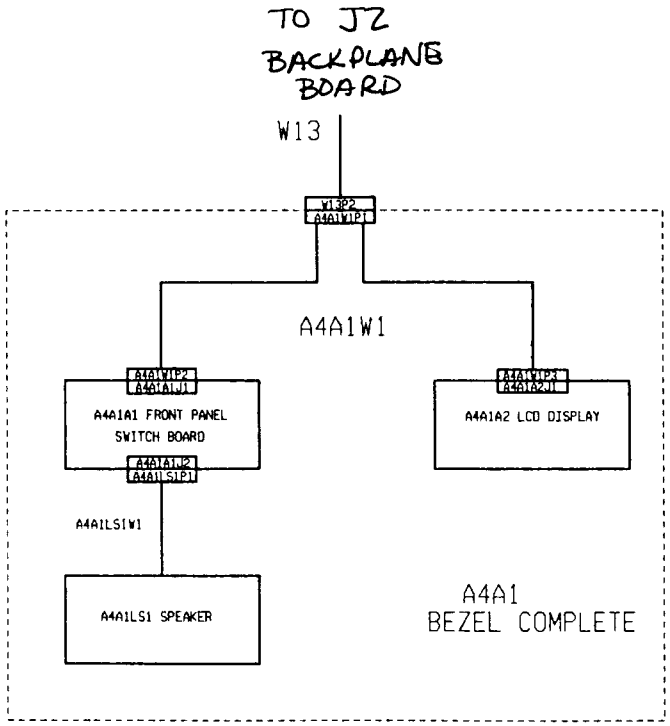

A4 FRONT PANEL ASSEMBLY

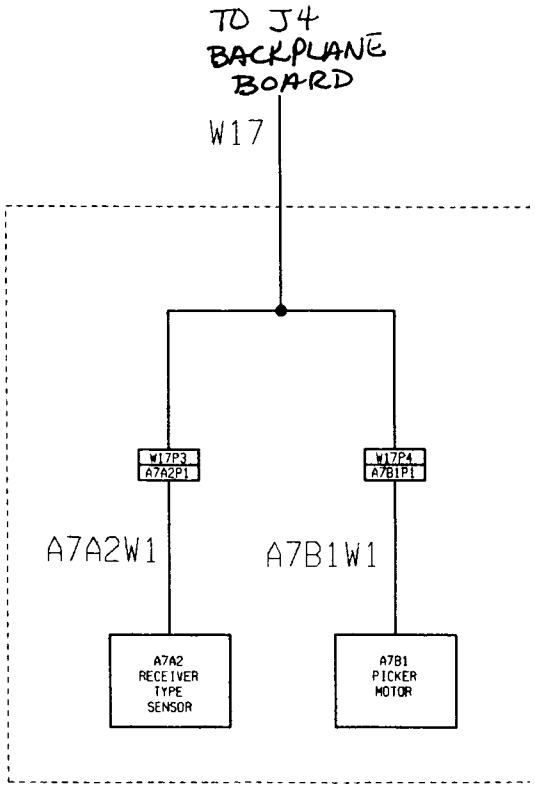

A7 RECEIVER PICKER ASSEMBLY

Figure 38
ASSEMBLY Interconnects
Model 7700

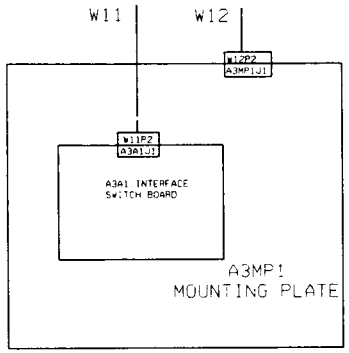

A3 INTERFACE ASSEMBLY

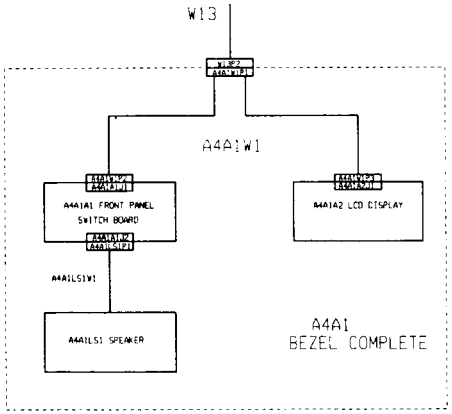

A4 FRONT PANEL ASSEMBLY

SCHEMATIC: INTERFACE 744505
FRONT PANEL 717759

Figure 38A
ASSEMBLY Interconnects
Model 7720

A4A1W1

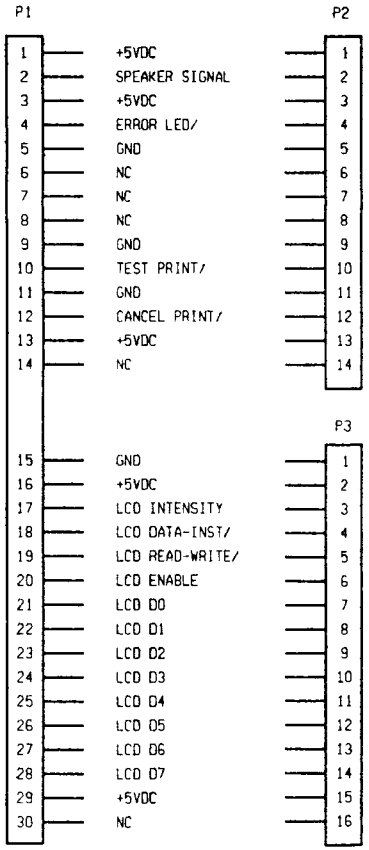

A4A1LS1W1

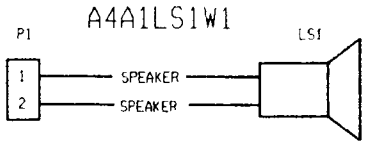

CONNECTORS

	CABLE TYPE	P1	P2	P3	NOTES KAD PART NO.
A4A1W1	RIBBON (30)	DOUBLE ROW SOCKET CONNECTOR 30 PIN FEMALE	DOUBLE ROW SOCKET CONNECTOR 14 PIN FEMALE	DOUBLE ROW SOCKET CONNECTOR 16 PIN FEMALE	744631

	CABLE	P1	LS1	NOTES KAD PART NO.	
A4A1LS1W1	26 GAUGE 2 WIRE	MTA SERIES 2 PIN FEMALE	SPEAKER 1" FLAT	717742	

Figure 39
FRONT BEZEL Connectors
Model 7700

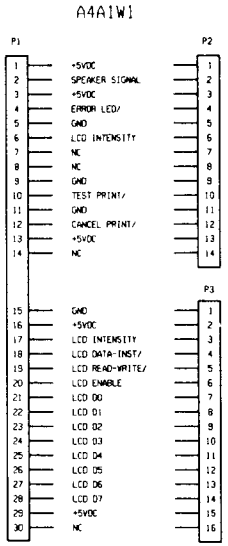

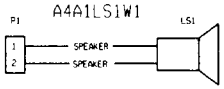

CONNECTORS

	CABLE TYPE	P1	P2	P3	NOTES KAD PART NO.
A4A1W1	RIBBON (30)	DOUBLE ROW SOCKET CONNECTOR 30 PIN FEMALE	DOUBLE ROW SOCKET CONNECTOR 14 PIN FEMALE	DOUBLE ROW SOCKET CONNECTOR 16 PIN FEMALE	744631

	CABLE	P1	LS1		NOTES KAD PART NO.
A4A1LS1W1	26 GAUGE 2 WIRE	MTA SERIES 2 PIN FEMALE	SPEAKER 1" FLAT		717742

Figure 39A
FRONT PANEL Interconnects
Model 7720

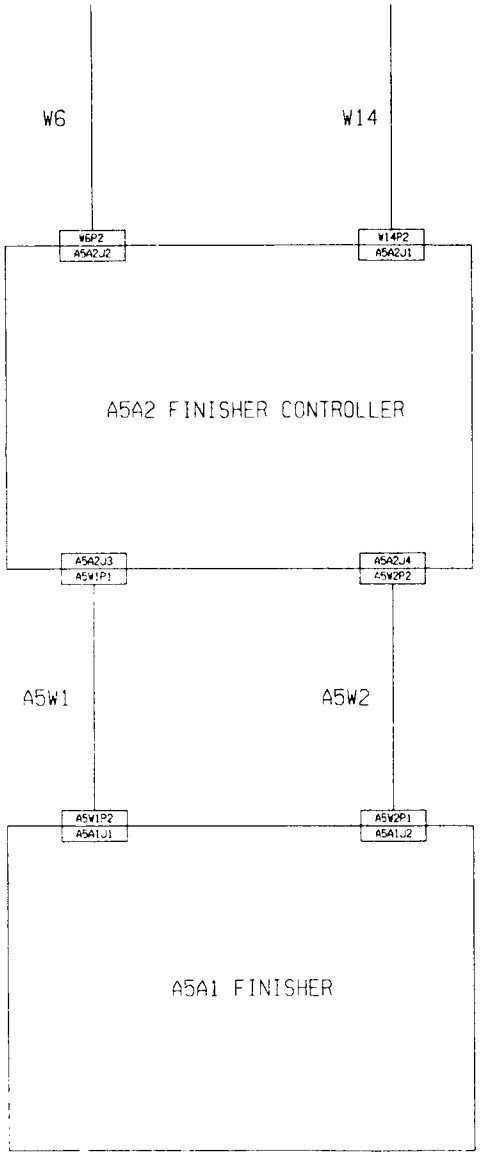

	CABLE TYPE	P1	P2	NOTES KAD PART NUM.
A5W1	16GA SHIELDED PAIR 22GA SHIELDED 3 WIRES	CANNON D-TYPE DAM-7W2P	CANNON D-TYPE DAM-7W2S	783563
A5W2	RIBBON (9)	CANNON D-TYPE DESF-9S	CANNON D-TYPE DESF-9P	744633

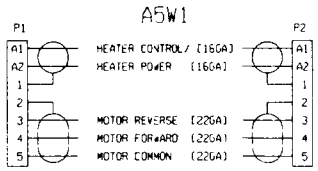

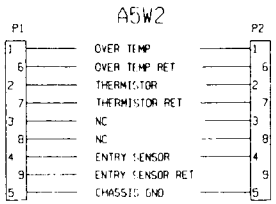

Figure 40
FINISHER Interconnec
Model 7700

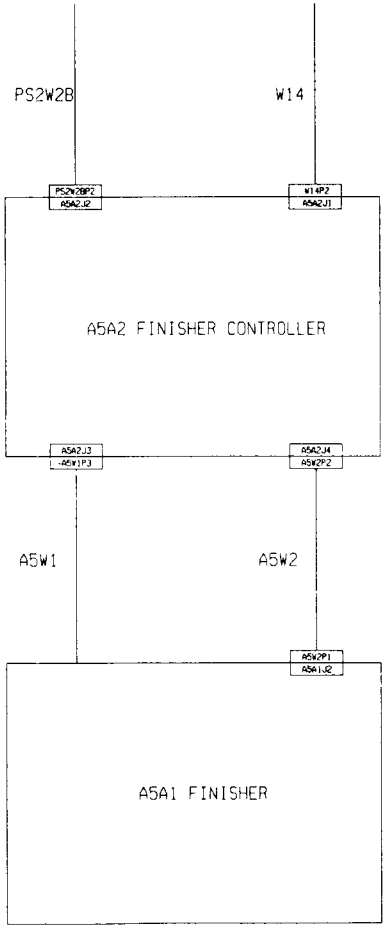

	CABLE TYPE	P1	P2	NOTES KAO PART NUM.
A5W2	RIBBON (9)	CANNON D-TYPE DESF-9S	CANNON D-TYPE DESF-9P	744633

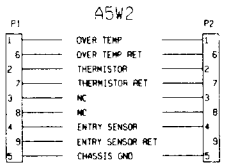

SCHEMATIC, FINISHER 259533
SCHEMATIC, FINISHER CONTROLLER 259531

Figure 40A
Style 2 FINISHER Interconnect
Models 7700 and 7720

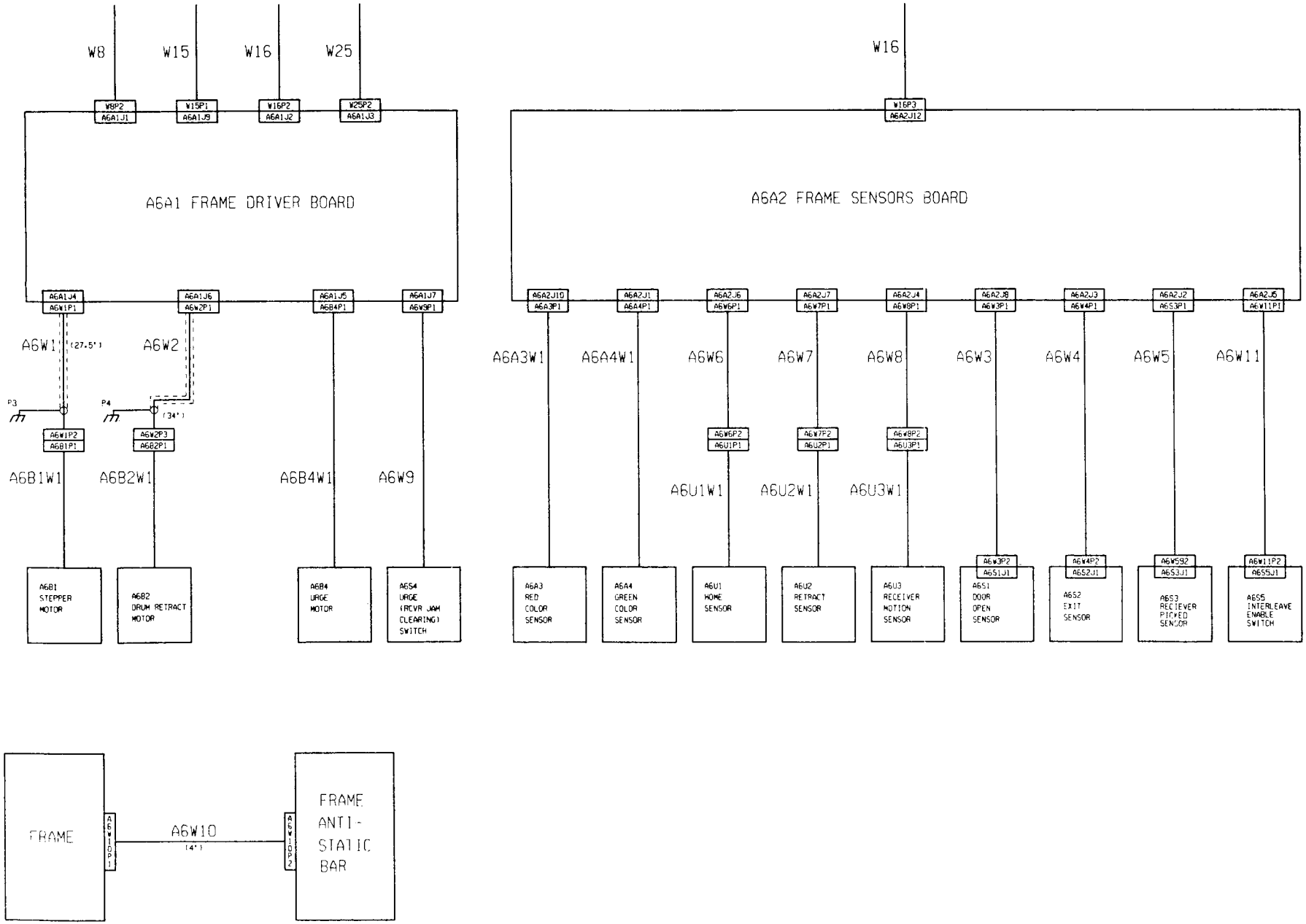

Figure 41
FRAME Interconnect
Model 7700

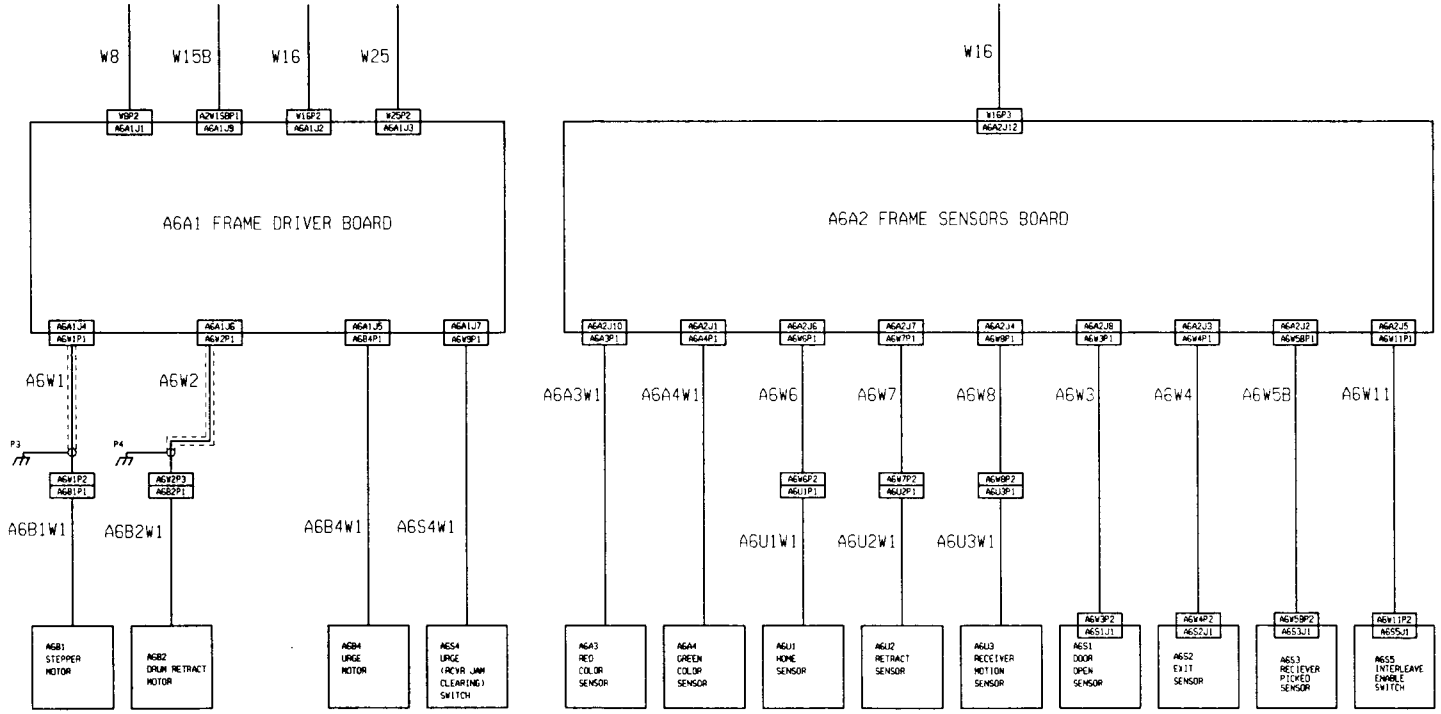

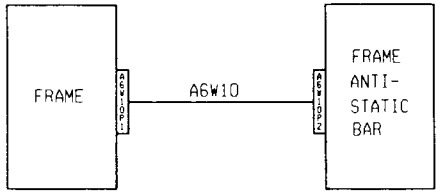

SCHEMATIC: FRAME DRIVER BOARD 783780
FRAME SENSOR 744541

Figure 41A
FRAME Interconnect
Model 7720

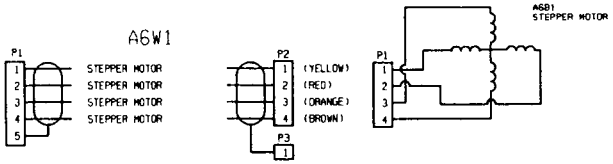

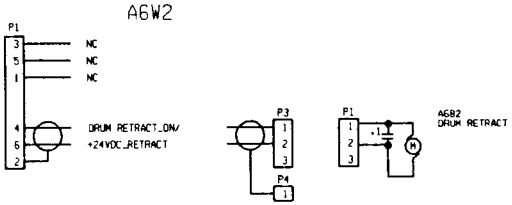

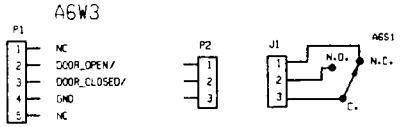

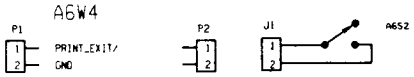

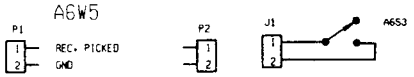

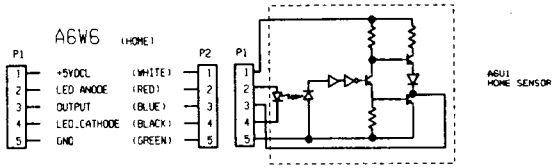

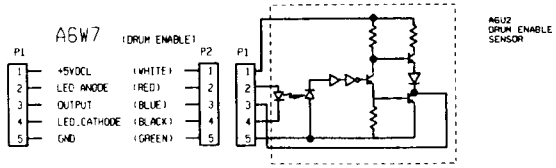

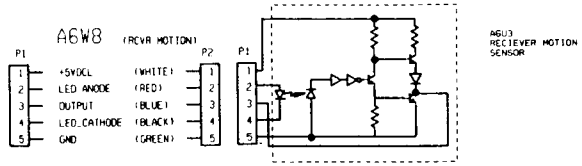

CONNECTORS

	CABLE TYPE	P1	P2	P3	P4	NOTES KAD PART NUM.
A6W1	22 GAUGE SHIELDED 4 WIRE	AMP MTA SERIES 5 PIN FEMALE	AMP MODU MTE SERIES 4 PIN MALE	*6 RING LUG		744634
A6W2	22 GAUGE SHIELDED TWISTED PAIR	AMP MTA SERIES 6 PIN FEMALE		AMP MTE SERIES 3 PIN FEMALE	*6 RING LUG	744635
A6W3	22 GAUGE 2 WIRES	AMP MODU MTE SERIES 2 PIN FEMALE	.110 FAST-ONS (2)			744636
A6W4	22 GAUGE 2 WIRES	AMP MODU MTE SERIES 2 PIN FEMALE	.110 FAST-ONS (2)			744637
A6W5	22 GAUGE 2 WIRES	AMP MODU MTE SERIES 2 PIN FEMALE	.110 FAST-ONS (2)			744638
A6W6	26 GAUGE 5 WIRES	AMP MODU MTE SERIES 5 PIN FEMALE	AMP MODU MTE SERIES 5 PIN MALE			717743
A6W7	26 GAUGE 5 WIRES	AMP MODU MTE SERIES 5 PIN FEMALE	AMP MODU MTE SERIES 5 PIN MALE			744560
A6W8	26 GAUGE 5 WIRES	AMP MODU MTE SERIES 5 PIN FEMALE	AMP MODU MTE SERIES 5 PIN MALE			744563
A6W10	22 GAUGE 1 WIRE	*6 RING LUG	*4 RING LUG			744567
A6W11	22 GAUGE 2 WIRES	AMP MODU MTE SERIES 5 PIN FEMALE	.187 FLAG FAST-ONS (2)			258765

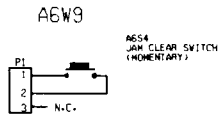

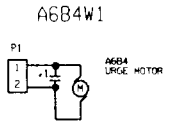

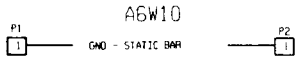

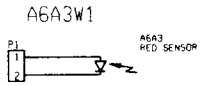

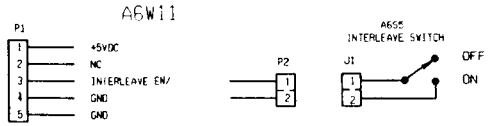

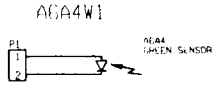

Figure 42
FRAME Connectors
Model 7700

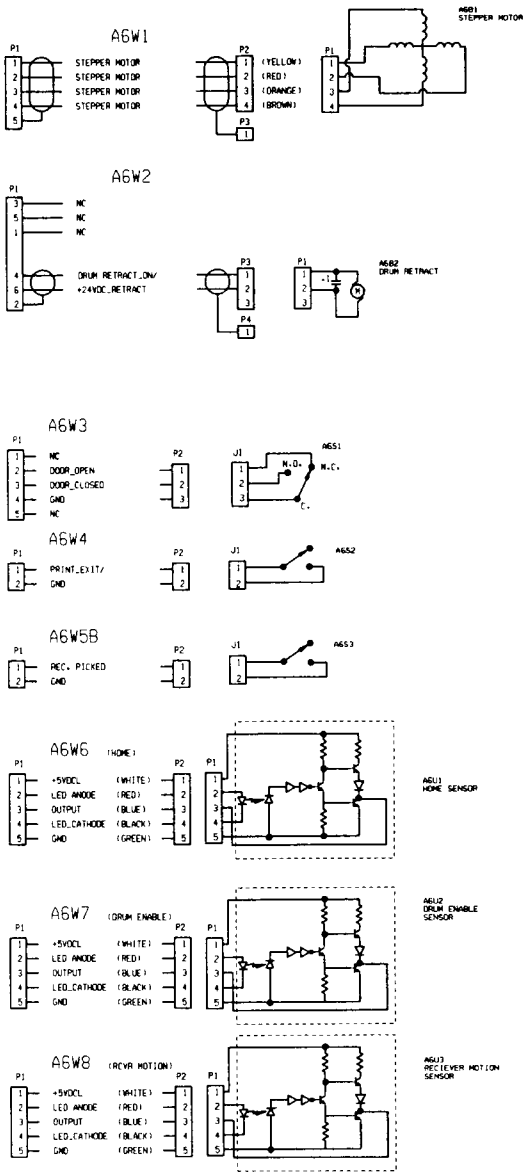

CONNECTORS

	CABLE TYPE	P1	P2	P3	P4	NOTES KAD PART NUM.
A6W1	22 GAUGE SHIELDED 4 WIRE	AMP MTA SERIES 5 PIN FEMALE	AMP MODU MTE SERIES 4 PIN MALE	#6 RING LUG		744634
A6W2	22 GAUGE SHIELDED TWISTED PAIR	AMP MTA SERIES 6 PIN FEMALE		AMP MTE SERIES 3 PIN FEMALE	#6 RING LUG	744635
A6W3	22 GAUGE 2 WIRES	AMP MODU MTE SERIES 2 PIN FEMALE	.110 FAST-ONS (2)			744636
A6W4	22 GAUGE 2 WIRES	AMP MODU MTE SERIES 2 PIN FEMALE	.110 FAST-ONS (2)			744637
A6W5B	22 GAUGE 2 WIRES	AMP MODU MTE SERIES 2 PIN FEMALE	.110 FAST-ONS (2)			785454
A6W6	26 GAUGE 5 WIRES	AMP MODU MTE SERIES 5 PIN FEMALE	AMP MODU MTE SERIES 5 PIN MALE			717743
A6W7	26 GAUGE 5 WIRES	AMP MODU MTE SERIES 5 PIN FEMALE	AMP MODU MTE SERIES 5 PIN MALE			744560
A6W8	26 GAUGE 5 WIRES	AMP MODU MTE SERIES 5 PIN FEMALE	AMP MODU MTE SERIES 5 PIN MALE			744563
A6W10	22 GAUGE 1 WIRE	#6 RING LUG	#4 RING LUG			744567
A6W11	22 GAUGE 2 WIRES	AMP MODU MTE SERIES 5 PIN FEMALE	.187 FLAG FAST-ONS (2)			258765

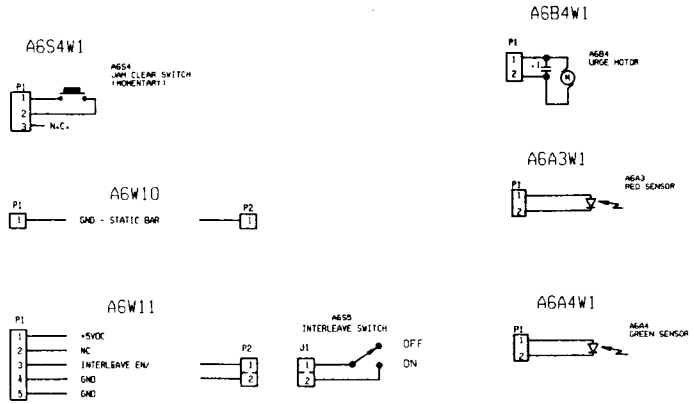

Figure 42A
FRAME Connectors
Model 7720

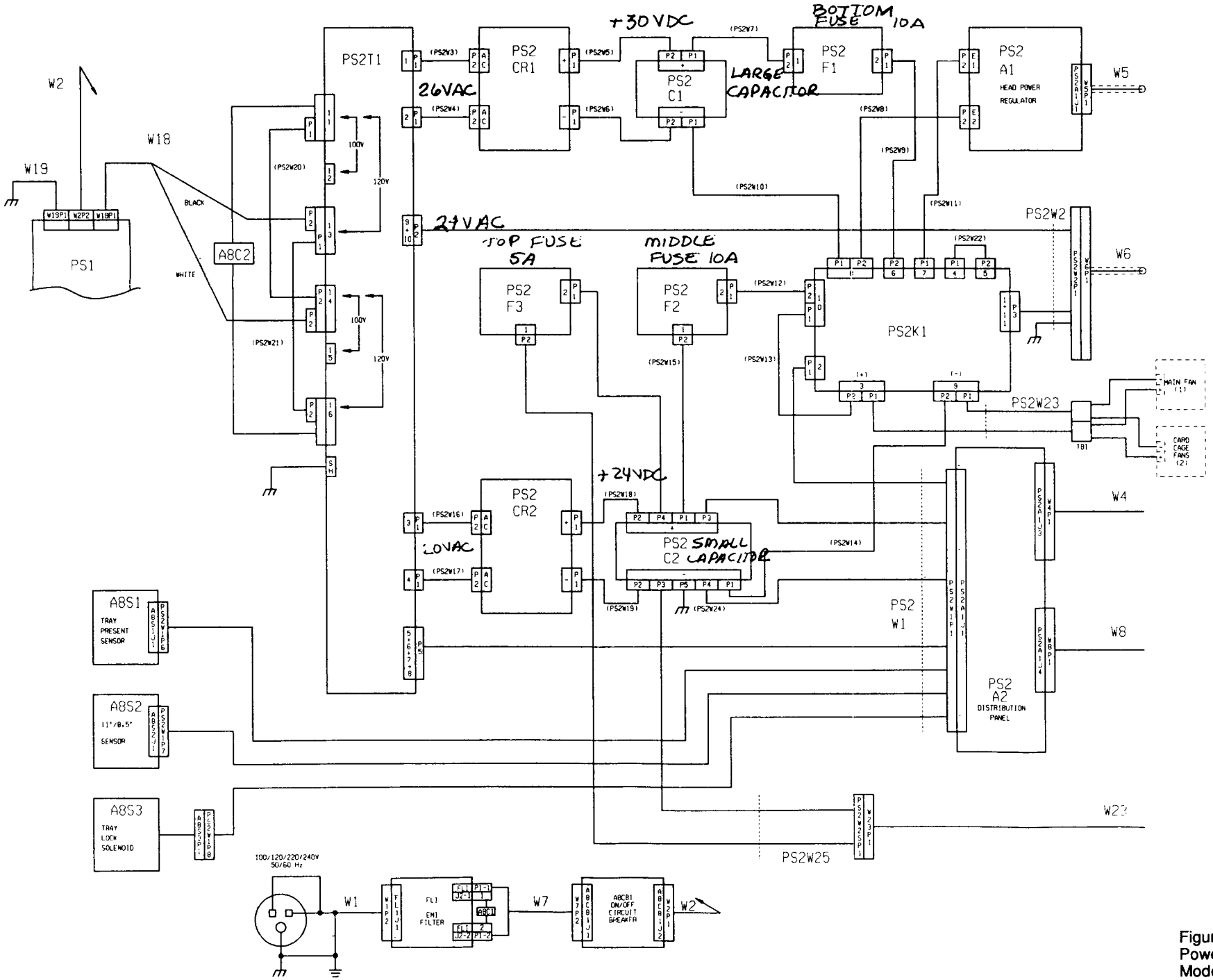

Figure 43
Power Distribution
Model 7700

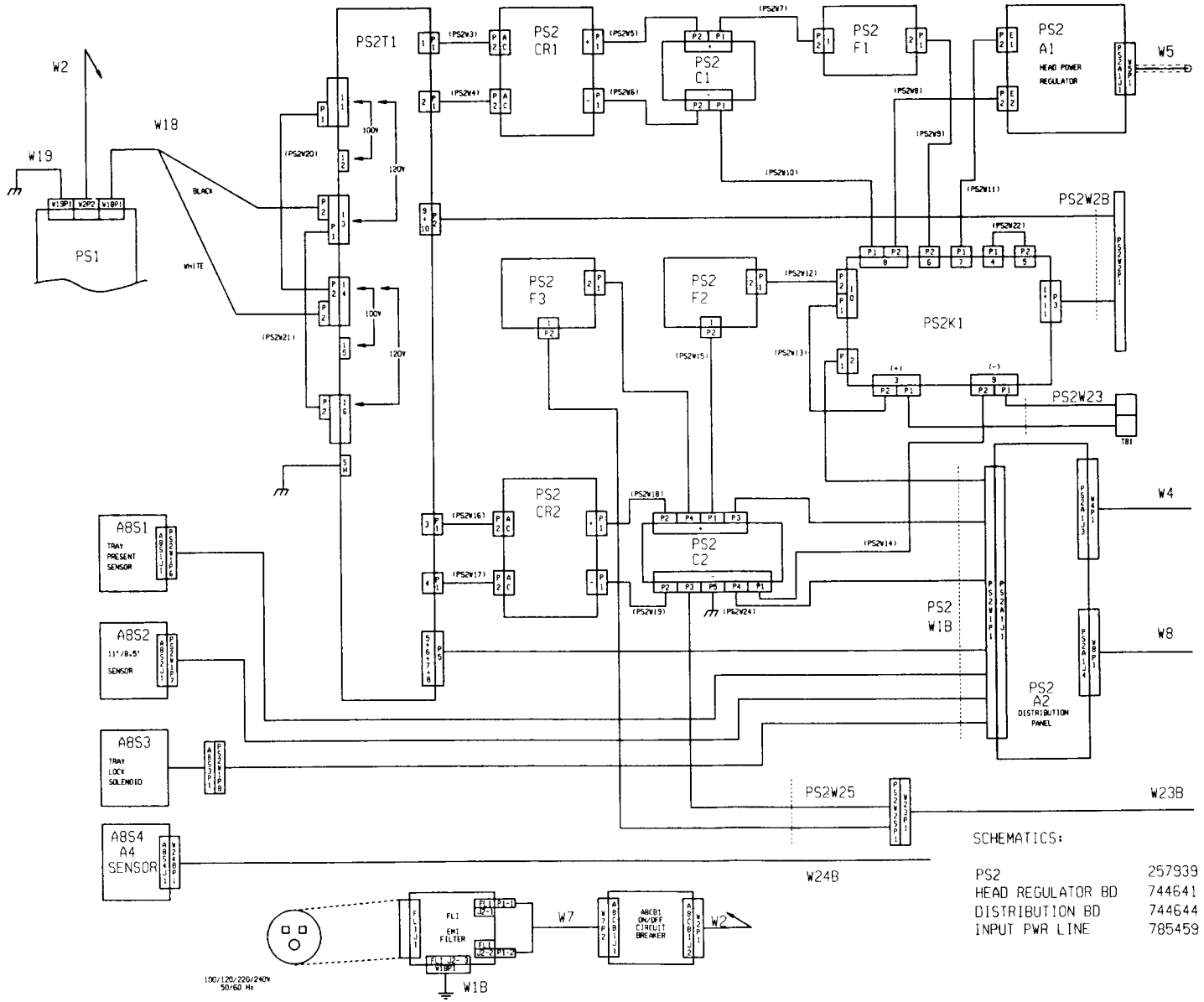

Figure 43A
Power Distribution
Model 7720

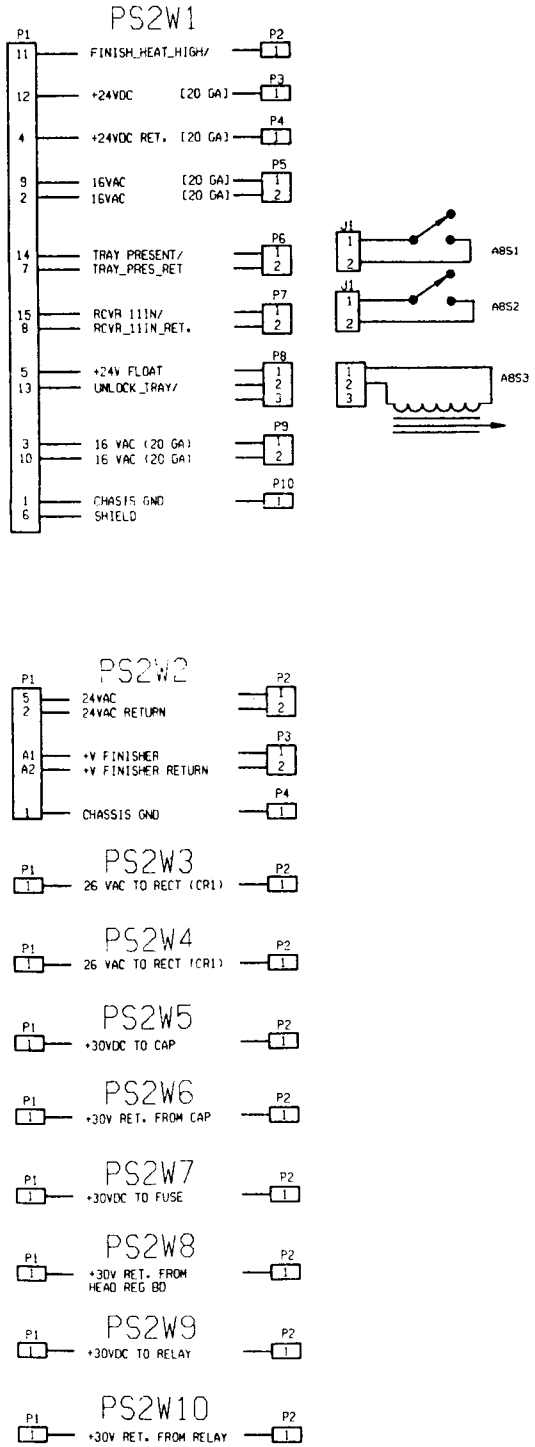

	CABLE TYPE	CONNECTORS P1	P2	P3	P4	P5	P6	P7	P8	P9	P10	KAD PART NUM.
PS2W1	20 GAUGE 5 WIRE 22 GAUGE 7 WIRE	CANNON D-TYPE DAU-15S	#6 RING LUGS	#10 RING LUG	#10 RING LUG	.250 FAST-ONS (2)	.110 FAST-ONS (2)	.110 FAST-ONS (2)	AMP MTE SERIES 3 PIN FEMALE	.250 FAST-ONS (2)	#6 RING LUG	257444
PS2W2	16 GAUGE 2 WIRE 22 GAUGE 3 WIRE	CANNON D-TYPE DAM-7W2S	.250 FAST-ONS (2)	#6 RING LUGS (2)	#8 "5 TOOTH" RING LUG							257346
PS2W3	16 GAUGE 1 WIRE	.250 FAST-ON	.250 FAST-ON									258791
PS2W4	16 GAUGE 1 WIRE	.250 FAST-ON	.250 FAST-ON									258791
PS2W5	16 GAUGE 1 WIRE	.250 FAST-ON	1/4" RING LUG									717676
PS2W6	16 GAUGE 1 WIRE	.250 FAST-ON	1/4" RING LUG									717649
PS2W7	16 GAUGE 1 WIRE	1/4" RING LUG	.187 FLAG FAST-ON									717718
PS2W8	16 GAUGE 1 WIRE	#6 RING LUG	#6 RING LUG									717720
PS2W9	16 GAUGE 1 WIRE	.187 FLAG FAST-ON	#6 RING LUG									717719
PS2W10	16 GAUGE 1 WIRE	1/4" RING LUG	#6 RING LUG									717722

Figure 44
Power Connectors
Model 7700

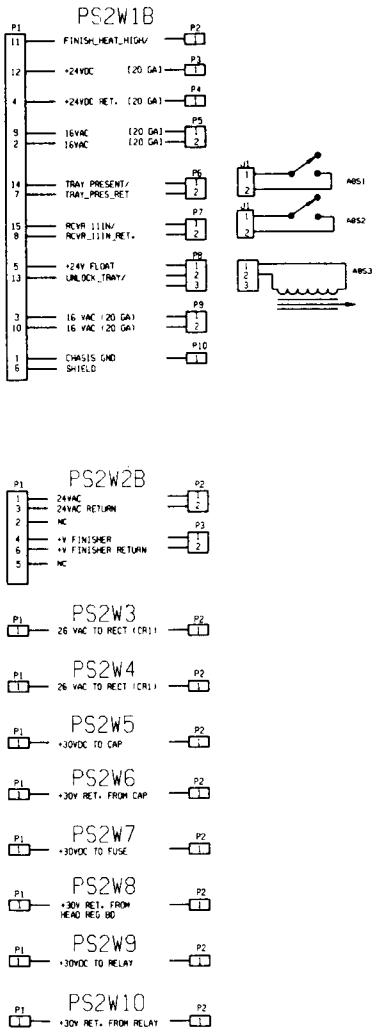

	CABLE TYPE	CONNECTORS P1	P2	P3	P4	P5	P6	P7	P8	P9	P10	XAO PART NUM.
PS2W1B	20 GAUGE 5 WIRE 22 GAUGE 7 WIRE	CANNON D-TYPE DAU-15S	#6 RING LUGS	#10 RING LUG	#10 RING LUG	.250 FAST-ONS (2)	.110 FAST-ONS (2)	.110 FAST-ONS (2)	AMP MTE SERIES 3 PIN FEMALE	.250 FAST-ONS (2)	#6 RING LUG	785463
PS2W2B	16 GAUGE 2 WIRE 22 GAUGE 3 WIRE	MATE-N-LOCK PLUG 6 PIN	.250 FAST-ONS (2)	.350 STRIP (BARE WIRE) (2)								784385
PS2W3	16 GAUGE 1 WIRE	.250 FAST-ON	.250 FAST-ON									258791
PS2W4	16 GAUGE 1 WIRE	.250 FAST-ON	.250 FAST-ON									258791
PS2W5	16 GAUGE 1 WIRE	.250 FAST-ON	1/4" RING LUG									717676
PS2W6	16 GAUGE 1 WIRE	.250 FAST-ON	1/4" RING LUG									717649
PS2W7	16 GAUGE 1 WIRE	1/4" RING LUG	.187 FLAG FAST-ON									717718
PS2W8	16 GAUGE 1 WIRE	#6 RING LUG	#6 RING LUG									717720
PS2W9	16 GAUGE 1 WIRE	.187 FLAG FAST-ON	#6 RING LUG									717719
PS2W10	16 GAUGE 1 WIRE	1/4" RING LUG	#6 RING LUG									717722

Figure 44A
Power Connectors
Model 7720

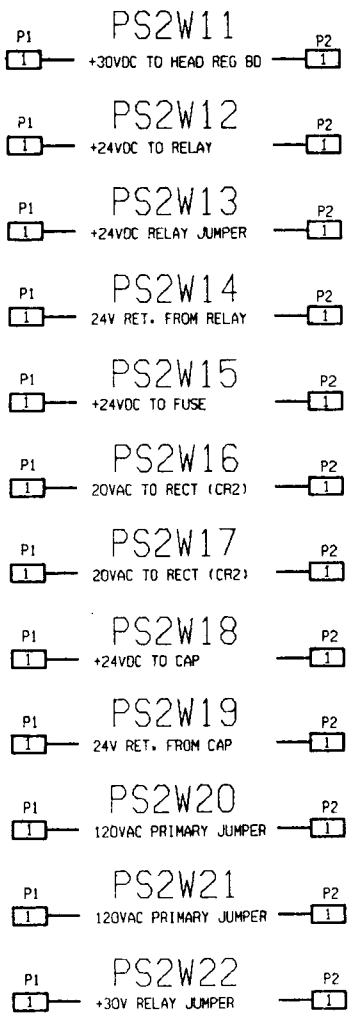

	CABLE TYPE	CONNECTORS P1	P2	P3	NOTES KAD PART NUM.
PS2W11	16 GAUGE 1 WIRE	#6 RING LUG	#6 RING LUG		717723
PS2W12	16 GAUGE 1 WIRE	.187 FLAG FAST-ON	#6 RING LUG		717713
PS2W13	16 GAUGE 1 WIRE	#6 RING LUG	#6 RING LUG		717728
PS2W14	16 GAUGE 1 WIRE	#10 RING LUG	#6 RING LUG		717707
PS2W15	16 GAUGE 1 WIRE	#10 RING LUG	.187 FLAG FAST-ON		717712
PS2W16	16 GAUGE 1 WIRE	.250 FAST-ON	.250 FAST-ON		258791
PS2W17	16 GAUGE 1 WIRE	.250 FAST-ON	.250 FAST-ON		258791
PS2W18	16 GAUGE 1 WIRE	#10 RING LUG	.250 FAST-ON		717685
PS2W19	16 GAUGE 1 WIRE	#10 RING LUG	.250 FAST-ON		717688
PS2W20	16 GAUGE 1 WIRE	.250 FAST-ON/TAB COMBO	.250 FAST-ON		717729
PS2W21	16 GAUGE 1 WIRE	.250 FAST-ON/TAB COMBO	.250 FAST-ON		717730
PS2W22	16 GAUGE 1 WIRE	#6 RING LUG	#6 RING LUG		717728
PS2W23	22 GAUGE TWISTED PAIR	#6 RING LUG (2)	.250 FAST-ONS (2)		258272
PS2W24	7/32" BRAID	#10 RING LUG	#6 "5 TOOTH" RING LUG		257944
PS2W25	16 GAUGE 2 WIRE	MOLEX 1545 SERIES 2 PIN FEMALE	#10 RING LUG	.187 FLAG FAST-ON	258396
PS2W26	16 GAUGE 1 WIRE	#10 RING LUG	.187 FLAG FAST-ON		717712

Figure 45
Power Connectors
Model 7700

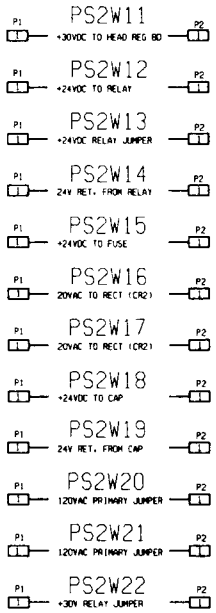

	CABLE TYPE	CONNECTORS P1	P2	P3	NOTES KAD PART NUM.
PS2W11	16 GAUGE 1 WIRE	#6 RING LUG	#6 RING LUG		717723
PS2W12	16 GAUGE 1 WIRE	.187 FLAG FAST-ON	#6 RING LUG		717713
PS2W13	16 GAUGE 1 WIRE	#6 RING LUG	#6 RING LUG		717728
PS2W14	16 GAUGE 1 WIRE	#10 RING LUG	#6 RING LUG		717707
PS2W15	16 GAUGE 1 WIRE	#10 RING LUG	.187 FLAG FAST-ON		717712
PS2W16	16 GAUGE 1 WIRE	.250 FAST-ON	.250 FAST-ON		258791
PS2W17	16 GAUGE 1 WIRE	.250 FAST-ON	.250 FAST-ON		258791
PS2W18	16 GAUGE 1 WIRE	#10 RING LUG	.250 FAST-ON		717685
PS2W19	16 GAUGE 1 WIRE	#10 RING LUG	.250 FAST-ON		717688
PS2W20	16 GAUGE 1 WIRE	.250 FAST-ON/TAB COMBO	.250 FAST-ON		717729
PS2W21	16 GAUGE 1 WIRE	.250 FAST-ON/TAB COMBO	.250 FAST-ON		717730
PS2W22	16 GAUGE 1 WIRE	#6 RING LUG	#6 RING LUG		717728
PS2W23	22 GAUGE TWISTED PAIR	#6 RING LUG (2)	.250 FAST-ONS (2)		258272
PS2W24	7/32" BRAID	#10 RING LUG	#6 "S TOOTH" RING LUG		257944
PS2W25	16 GAUGE 2 WIRE	MOLEX 1545 SERIES 2 PIN FEMALE	#10 RING LUG	.187 FLAG FAST-ON	258396
PS2W26	16 GAUGE 1 WIRE	#10 RING LUG	.187 FLAG FAST-ON		717712

Figure 45A
Power Connectors
Model 7720

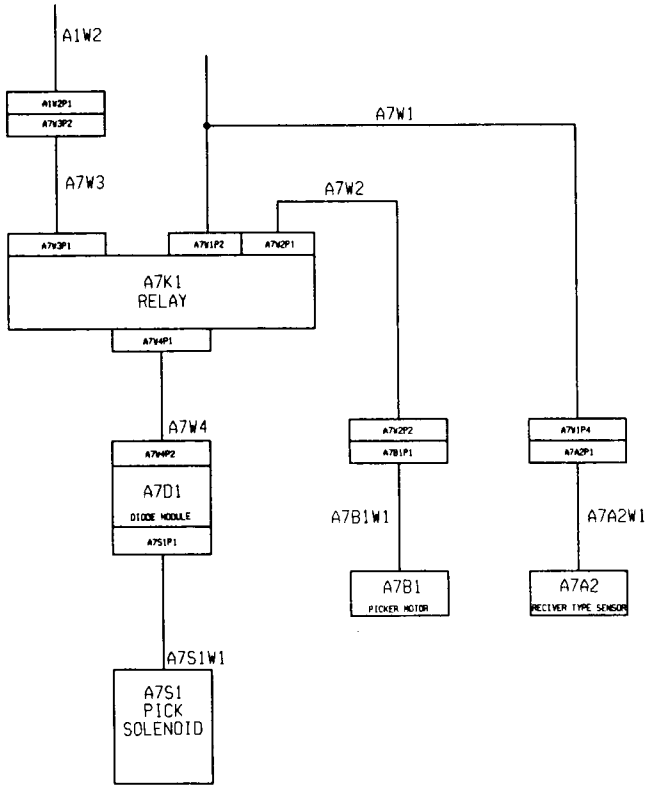

A7 RECEIVER PICKER ASSEMBLY

Figure 46
RECEIVER PICKER Interconn
Model 7720

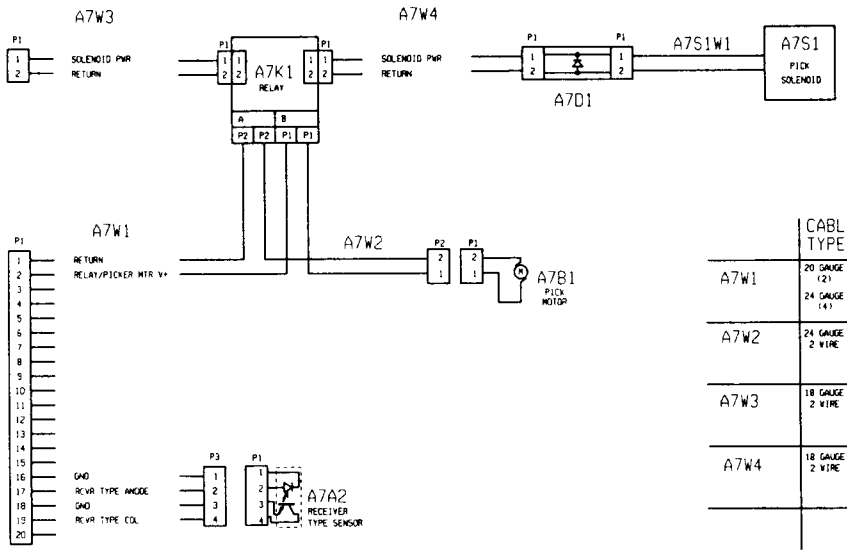

CONNECTORS

	CABLE TYPE	P1	P2	P3	NOTES KAD PART NO.
A7W1	20 GAUGE (2) 24 GAUGE (4)	AMP MODU 20 PIN FEMALE	.187 FASTON/TAB COMBO. (2)	AMP MODU MTE SERIES 3 PIN MALE	784036
A7W2	24 GAUGE 2 WIRE	.187 FASTON/TAB COMBO. (2)	AMP MODU MTE 2 PIN MALE		784033
A7W3	18 GAUGE 2 WIRE	.187 FASTON/TAB COMBO. (2)	MOLEX 1545 MOLEX 2 PIN FEMALE		784034
A7W4	18 GAUGE 2 WIRE	.187 FASTON/TAB COMBO. (2)	AMP MATE-N-LOCK 2 PIN MALE		784035

Figure 47
RECEIVER/PICKER Interconnect
Model 7720