DUAL BEAM OSCILLOSCOPE

PART TWO BY JOHN BECKER

SCREENING AN X-RATED SYSTEM

This month's instalment of our major project describes the time-base generator and how the X-axis scan is controlled.

Last month we saw how an electron beam was produced within a cathode ray tube, accelerated, focussed and caused to impact on a fluorescent screen. Following construction of the power supply, we saw how manually controlled pots could deflect the beam spot around the screen. Obviously, for the scope to have any meaningful purpose the spot manipulation must be under automatic deflection control.

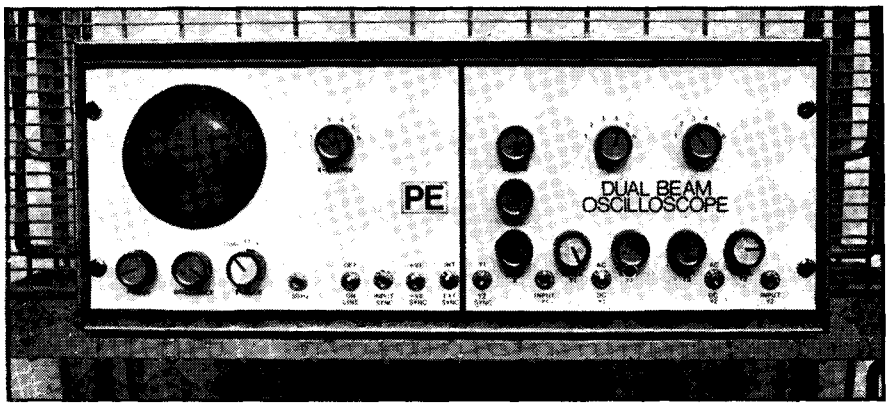

BEAM SWEEPING

First we need to put the beam under repetitive horizontal movement, progressively changing the potential on the X plate pairs so that the beam traverses the screen from one side to the other, conventionally moving from left to right. On reaching the right hand end of its sweep the beam then has to be returned to its left hand origin and start across once more.

While the beam is sweeping across it can additionally be deflected up or down by the potential on the Y plate pairs. When the Y axis potential is reacting to an ac waveform it will be seen from Fig.14 that the horizontal sweep must be timed so that the spacing between the waveform peaks is neither too close, nor too wide since we usually need to observe only a few cycles of the Y signal. Consequently, we must be able to vary the sweep speed to suit different signal frequencies.

Naturally, the vertical deflection of the beam will occur irrespective of the direction of the sweep. This will result in the signal being traced on the screen in both directions and could lead to visual display confusion, such as in Fig.15.

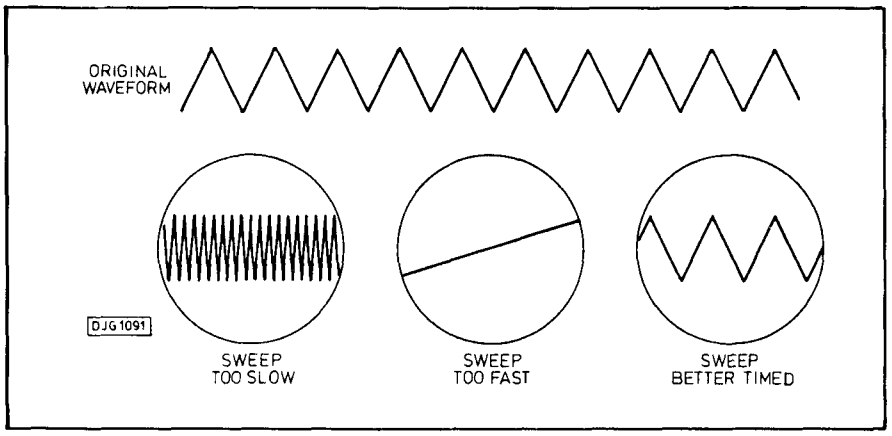

Fig.14 *Effect of using different sweep speeds for the same sampled waveform.*

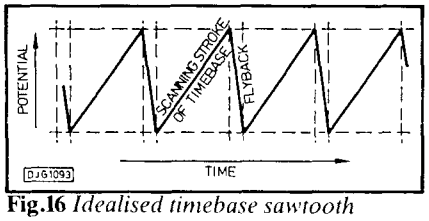

Fig.16 *Idealised timebase sawtooth waveform.*

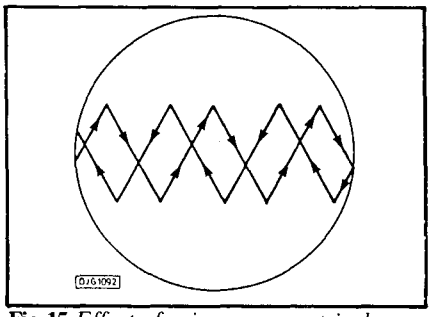

Fig.15 *Effect of using a symmetrical X-axis sweep with an ac waveform on the Y-axis.*

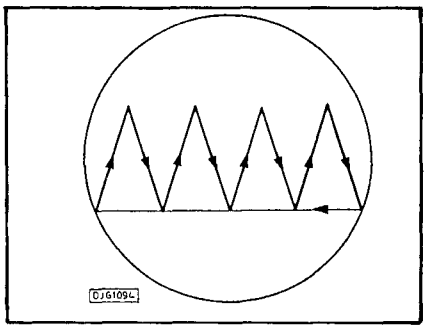

Fig.17 *Effect of using a sawtooth X-axis sweep with an ac waveform on the Y-axis.*

What we need is to sweep the beam across the screen from far left to far right at the required rate, then to return it rapidly to the left so that during the return its vertical deflection has insufficient time to change significantly. Therefore, the sweep control waveform needs to be a sawtooth, as in Fig.16, or some other form of retriggered ramp. We shall also see later that the flyback trace, shown in Fig.17, can be suppressed.

Ideally, for most waveform examinations, each sweep across the screen needs to be timed so that each waveform display starts at the same point of the vertical trace. Thus we need to synchronise the X and Y traces to avoid further visual confusion, such as that seen in Fig.18.

BASIC TIME BASE

The general term given to the horizontal sweep oscillator is time base, and as we have just seen, in its simplest form it is just a sawtooth waveform generator.

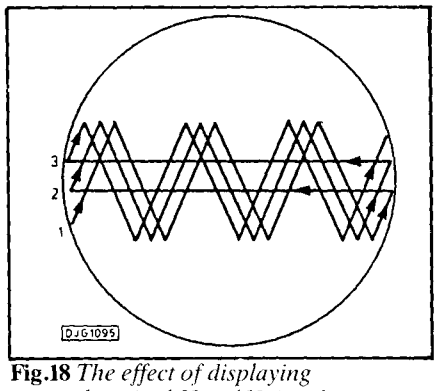

Fig.18 *The effect of displaying unsynchronised X and Y signals.*

There are many ways of generating sawteeth and the basic one chosen for this project is shown in Fig.19.

Assume that the output of IC2 is low, and that C1 is discharging at a rate set by VR1. In response, the output of IC1 progressively increases until the voltage at the positive input to IC2 rises above that on its negative input. Being configured as a comparator, the output of IC2 now goes high, immediately recharging C1 via D1. Simultaneously, the output of IC1 goes low thus resetting IC2 to its low output state, whereupon C1 again starts discharging via VR1, and so the cycle continues.

By using a switched bank of different value capacitors, plus the variable pot, a very wide variety of frequencies can be generated. There is a problem, though, due to the response time of the opamps. Although the threshold trigger voltage remains constant irrespective of the frequency, the time taken for the opamps to reset results in the output of IC1A falling to different levels for different frequencies. Consequently, the low end of the ramp terminates at a higher voltage for slow frequencies than it does for fast ones. Even the high speed LM6361 suffers from this effect and was found to have no greater merits for this oscillator than the less expensive TL082. Standardisation of the ramp amplitude is achieved by the inclusion of an additional gate and trigger circuit. The full time base circuit diagram is shown in Fig.20.

RAMP GENERATOR

The configuration around IC1A and IC1B forms the retriggerable ramp generator. Capacitors C1-C6 are switched by S1A to select the basic ramp rates and VR2 provides intermediate rate variation control. The retriggering and amplitude standardisation, though, is conditional upon several other circuit factors.

Assume for the moment that the right hand end of VR2 is simply taken to the negative line, providing a path for discharging the selected capacitor. Also assume that the capacitor is now fully charged and, therefore, that the output of IC1A is low. This output voltage is taken via VR1 to TR3 and is low enough not to turn on the transistor. Consequently, the threshold bias voltage applied to pin 6 of the comparator IC1B comes via R7 and D2, and the output of IC1B is correspondingly held low.

As the capacitor discharges, the output of IC1A continues to rise, and passing through D1, eventually crosses the comparator's threshold level. IC1B trips and its output goes high charging the capacitor via D3. The output of IC1A goes low, but D1 prevents IC1B from being reset by this change. Only when the output of IC1A has fallen low enough to turn off TR3 will the comparator threshold level be changed by the higher voltage from R7. At this point IC1B will revert to its original low-output state. The overall result is that with VR1 correctly set, the output of IC1A will fall as low as its nature can ever allow, and stay there until IC1B has been reset.

SYNC RETRIGGERING

We assumed above that the right hand end of VR2 was taken direct to the negative line. In fact, it is only taken low when either D5 or D6 are biased to allow it. This routing is dictated by the requirements for synchronising the ramp to the waveform being monitored. It also ensures that the ramp will eventually be retriggered even if a sync pulse does not occur, in the absense of an input signal for example.

Let's look at sync triggering first and examine the circuits around IC2A, IC3A and IC4. Ignore the automatic retriggering circuit around IC2B for the moment.

The sync trigger can come from either of the two Y-input amps, or from an external source. In the latter instance, the signal is first decoupled by C17 and restricted to a maximum of ±5V by R18, D8 and D9. S3 selects between internal and external sources, VR5 sets the required level, and then S4 selects the trigger polarity by switching IC4 between inverting and non-inverting modes.

The output of IC4 produces a positive-going pulse across C18, D18 and R23 which is taken to the clock input of the flip-flop IC3A. When the pulse is of sufficient amplitude IC3A receives it as a clock pulse, whereupon its pin 2 goes low and remains so until reset. For as long as IC3A pin 2 stays slow, so the right hand end of VR2 is held low via D5, providing a discharge path for the selected ramp control capacitor.

INHIBITED

After the end of the ramp flyback and when IC1B pin 7 has been reset low, the output of IC2A, an inverting Schmitt trigger, goes high and a positive-going pulse is generated across C7. This pulse resets the flip-flop IC3A and its pin 2 goes high, so inhibiting the capacitor discharge path via VR2. The ramp will not start again until IC3A is triggered by the next clock pulse from IC4B. Each X-sweep trace will thus commence at the same relative position of the incoming sync waveform.

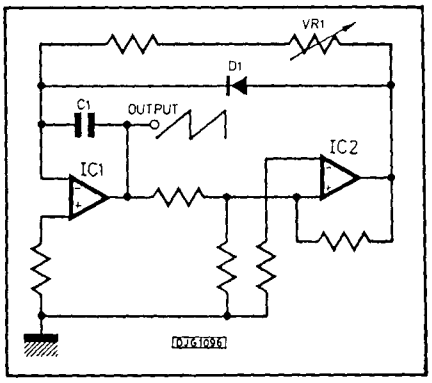

Fig.19 *Basic sawtooth generator.*

AUTO RETRIGGERING

It is frequently preferable to have the X-trace constantly sweeping across the screen even in the absence of an ac input signal, when monitoring dc levels for example. So it's necessary to have an alternative ramp retrigger source that takes over if the sync signal is missing. This is where the circuit around IC2B comes into play.

When IC3A pin 2 goes high, current flows through R9 and into the capacitor selected by S1B. The capacitor charges until the trigger threshold of the Schmitt trigger IC2B is passed. Its output at pin 4 then goes low, and with S2 closed, the discharge path for VR2 is available through D6. The X-ramp can now restart even though IC3A has not received a sync pulse.

The capacitor selected by S1B will stay charged for as long as IC3A remains untriggered, so IC2B will continue to provide the discharge path, thus allowing continuous ramp repetition. When a sync pulse is received by IC3A, the capacitor selected by S1B will discharge via R10 and D7, so that the effect of IC2B is inhibited. The relative values of C1-C6 and C8-C13 have been chosen to allow a reasonable opportunity for a sync signal to be acted upon before the automatic retriggering can be initiated.

With S2 open, the ramp will only be triggered each time a sync pulse is accepted by IC3A. If a pulse is not received, the beam spot will remain at full left hand deflection.

Fig.21 shows a typical retriggered ramp trace.

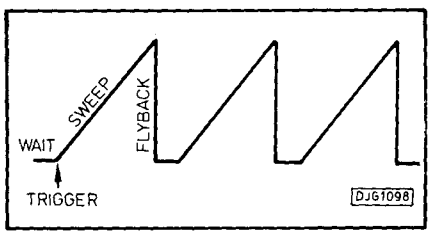

Fig.21 *Retriggered ramp trace.*

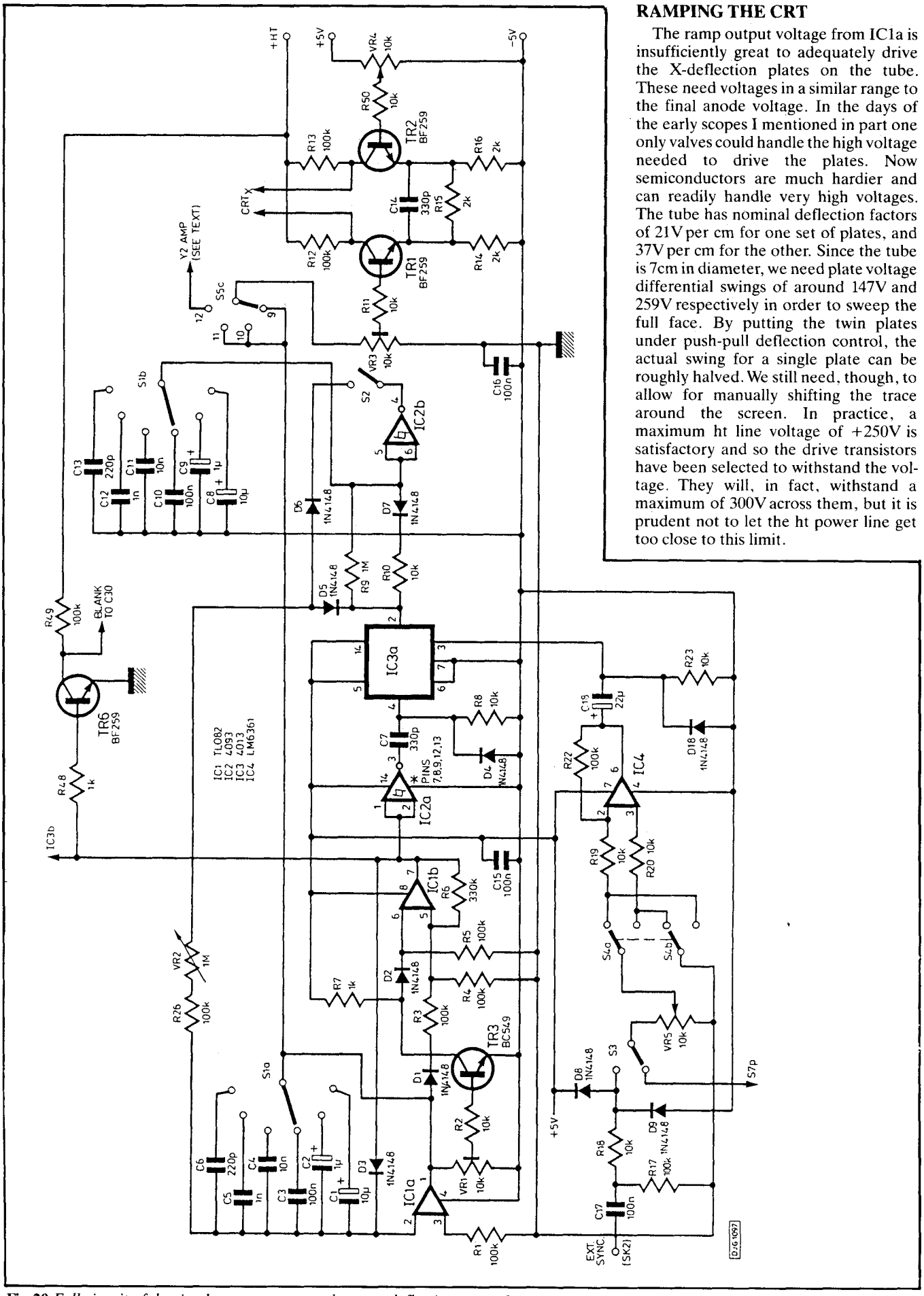

RAMPING THE CRT

The ramp output voltage from IC1a is insufficiently great to adequately drive the X-deflection plates on the tube. These need voltages in a similar range to the final anode voltage. In the days of the early scopes I mentioned in part one only valves could handle the high voltage needed to drive the plates. Now semiconductors are much hardier and can readily handle very high voltages. The tube has nominal deflection factors of 21V per cm for one set of plates, and 37V per cm for the other. Since the tube is 7cm in diameter, we need plate voltage differential swings of around 147V and 259V respectively in order to sweep the full face. By putting the twin plates under push-pull deflection control, the actual swing for a single plate can be roughly halved. We still need, though, to allow for manually shifting the trace around the screen. In practice, a maximum ht line voltage of +250V is satisfactory and so the drive transistors have been selected to withstand the voltage. They will, in fact, withstand a maximum of 300V across them, but it is prudent not to let the ht power line get too close to this limit.

Fig.20 *Full circuit of the timebase generator and output deflection control.*

The ramp voltage is brought via VR3 and R11 to TR1. VR3 should be set so that the output at the collector of TR1 swings smoothly across the full ramp range. The collector output is taken direct to one of the X-plates. The other X-plate is connected to the collector of TR2, which is under control of VR4. The emitter coupling between TR1 and TR2 introduces push-pull bias and by varying VR4 the screen trace position can be adjusted at will.

FLYBACK BLANKING

As mentioned earlier, although the X-sweep trace rapidly flys back to the left hand side, it is still possible to see it. However, the tube characteristics allow for the beam to be blanked out if a negative voltage is applied to the control grid. With reference to the cathode voltage, if the grid has a voltage of at least –50V applied during fly back, the trace will be blanked out.

The achieve this, the output of IC1B is taken to TR6. When the output of IC1B goes high, TR6 is turned on generating a negative-going pulse across C30 (see Fig.5), with D17 limiting the positive-going pulse edge.

TIME BASE ASSEMBLY

THE POWER SUPPLY MUST BE SWITCHED OFF AND THE CAPACITORS ALLOWED TIME TO DISCHARGE BEFORE MAKING ANY ASSEMBLY OR WIRING CHANGES.

The pcb layout for the time base is shown in Fig.22. Double-check that you correctly orientate the electrolytics and semiconductors. Note that S1 is a pcb mounting rotary switch and it is soldered to the *back* of the pcb. You will need to take special care when soldering its pins to ensure that all are properly connected. The bush of this switch will ultimately be used to hold the entire board on the front control panel. Note too that the Y-axis pcb is also fixed on the front panel by means of pcb-mounted switches.

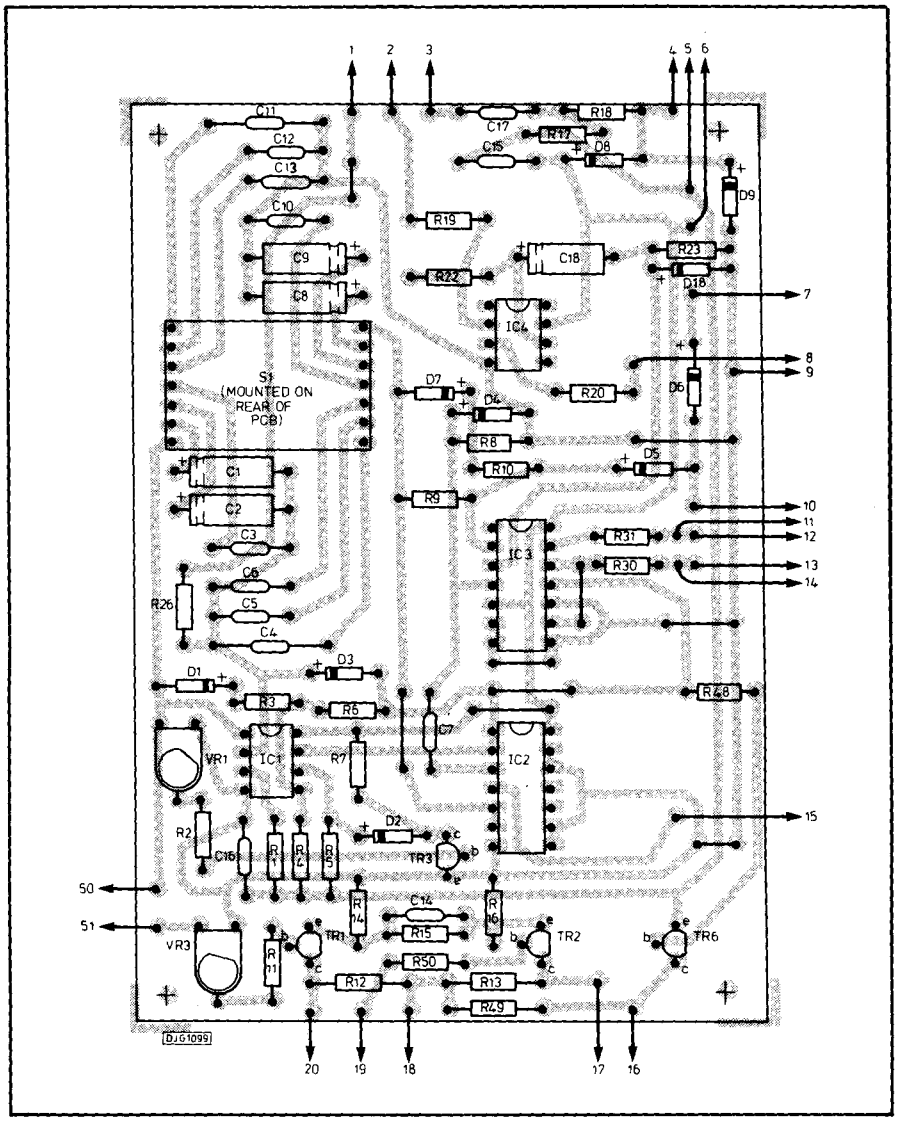

Fig.22 *PCB layout for the timebase generator.*

TESTING TIME

Do not connect the completed board to the tube until a few tests have first been carried out, starting with the basic time base oscillator.

Referring to Fig.24, connect VR2 to pcb pin 1 as shown, but take the other pot connection, not to pin 10, but to the –5V connection at pin 9. Connect the fly back blanking from TR6 to C30 on the power supply pcb and temporary link points 50 and 51. Connect the pcb±5V power lines to the psu, but don't yet connect the +250V line. Insert IC1 and switch on.

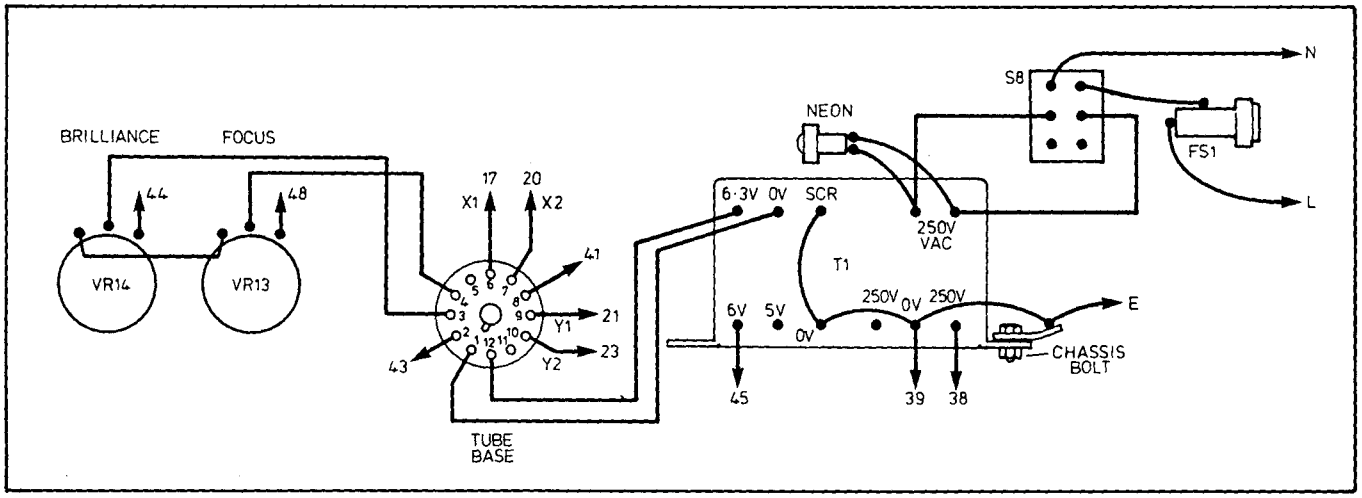

Fig.23 *Final power supply and tube control connections.*

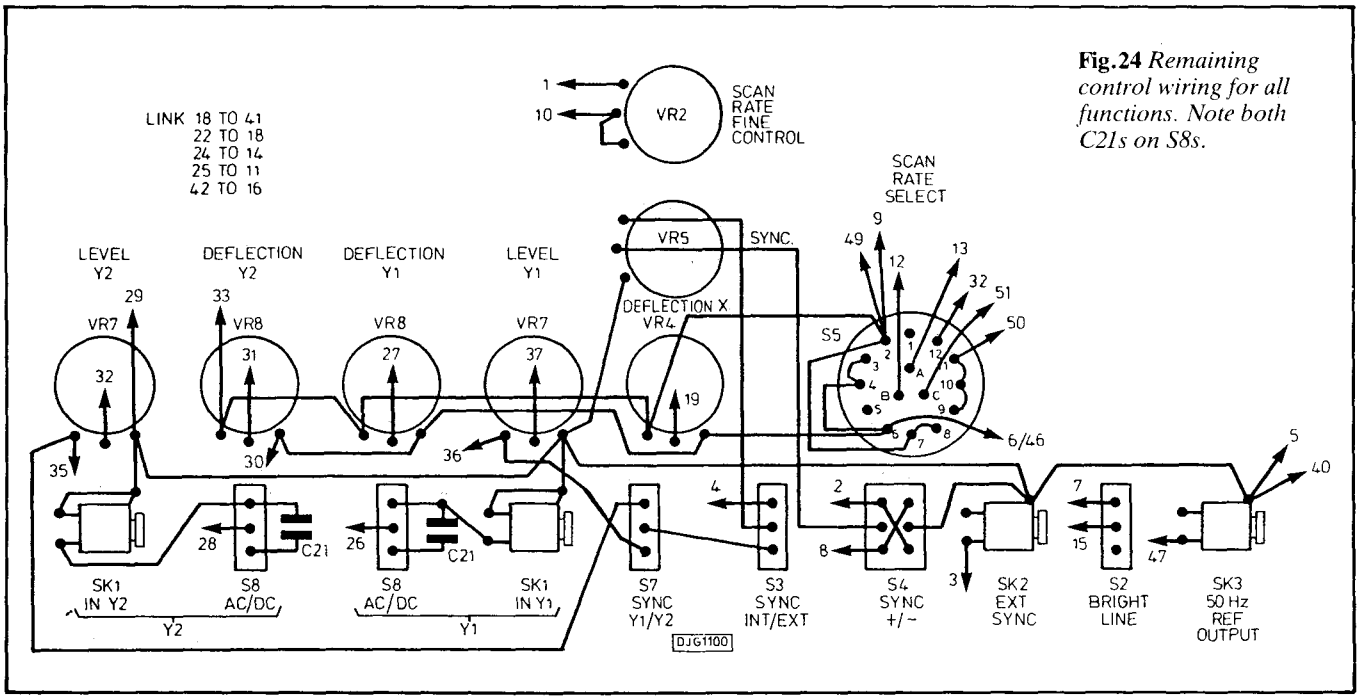

Fig.24 *Remaining control wiring for all functions. Note both C21s on S8s.*

COMPONENTS
OSCILLOSCOPE TIMEBASE

RESISTORS

R1,R3-R5,R12, R13,R17,R22, R26,R49	100k (10 off)
R2,R8,R10,R11, R18-R20,R23, R50	10k (9 off)
R6	330k
R7,R48	1k (2 off)
R9	1M
R14-R16	2k (3 off)

All resistors ¼W5% carbon

MISCELLANEOUS
Knobs (4 off), Phonosonics pcb 290A 8-pin ic socket (2 off) 14-pin ic socket (2 off), 3.5mm jack socket.

CAPACITORS

C1,C8	10μ 25V electrolytic (2 off)
C18	22μ 16V electrolytic
C2,C91	1μ 63V electrolytic (2 off)
C3,C10,C15-C17	100n polyester (5 off)
C4,C11	10n polystyrene (2 off)
C5,C12	1n polystyrene (2 off)
C6,C13	220p polystyrene (2 off)
C7,C14	330p polystyrene (2 off)

POTENTIOMETERS

VR1,VR3	10k skeleton (2 off)
VR2	1M mono rotary
VR4	100k mono rotary
VR5	10k mono rotary

SEMICONDUCTORS

D1-D9, D18	1N4148 (10 off)
TR1,TR2,TR6	BF259 (3 off)
TR3	BC549
IC1	TL082
IC2	4093
IC3	4013
IC4	LM6361

SWITCHES

S1	2p 6W pcb mounting
S2,S3	min spdt (2 off)
S4	min dpdt

The scope tube and base are available from Langrex Supplies Ltd, 1 Mayo Road, Croydon, Surrey CR0 2QP. 01-684 1166. (This new address and telephone number replace those quoted last month)

Connect a multimeter across IC1A pin 1 and the –5V line. With S1 set for slower speeds, rotate the wiper of VR1 until the meter shows that the oscillator is running. This will be apparent from seeing the meter needle slowly rise, then rapidly fall back. Check that VR2 can vary the rate. The fast ramping selection by S1 will not be too apparent on a meter, but this can be checked once connection to the tube has been made.

Now correctly connect VR2 to pcb pin 10, wire in S2, then insert IC2, IC3 and IC4. Continue monitoring IC1A pin 1, switch on S2 and check that repetitive ramping still occurs as before. Switching S2 open should stop the ramp. Temporarily connect the output of the 50Hz generator from the psu pcb to arrow S7p of S3. With S3 in either position, and VR5 fully turned up, the ramping should restart.

Switch off, connect up VR4 and bring the +250V line from psu pcb pin 41 to time base pcb pin 18. Switch on and monitor the +250V line on a meter. If necessary, readjust VR11 until +250V is obtained.

Next monitor the collector of TR1, switch the ramp to a continuous slow rate and adjust VR3 until the meter needle can be seen swinging back and forth with a midpoint around the 200V mark. Further adjustment can be made following connection to the tube. Now monitor the voltage swing at the collector of TR2 and check that VR4 is capable of varying the swing range up and down, then set VR4 for a midpoint swing of about 200V.

TUBE CONNECTION

Before connecting the X-trace leads to the tube base, first adjust the four temporary deflection pots, discussed last month, and position the beam spot in the centre. Then completely disconnect the two temporary X-axis pots, but leave the two Y-axis pots in place. Take the X tags of the tube base to their respective pcb points (pins 17 and 20).

Upon switching on again adjust VR4 until the horizontal trace is central across the screen. Now adjust VR3 until the trace length almost crosses the full screen width, readjusting VR4 if necessary.

Switching S1 between timing ranges, it may be apparent that the trace starts at different screen positions. If so, adjust VR1 until the start points are more uniformly matched. If you find the ramp reluctant to start at the slowest setting, slightly readjust VR1. Now readjust VR3 until the trace extends slightly off the screen to both sides. Recheck the +250V line and if necessary readjust VR11.

That concludes the time base generator, but I regret you'll have to wait until next month for the Y-axis controls and dual-beam splitter. PE

NEXT MONTH

Details of the input amplifiers and guidelines on using a scope.