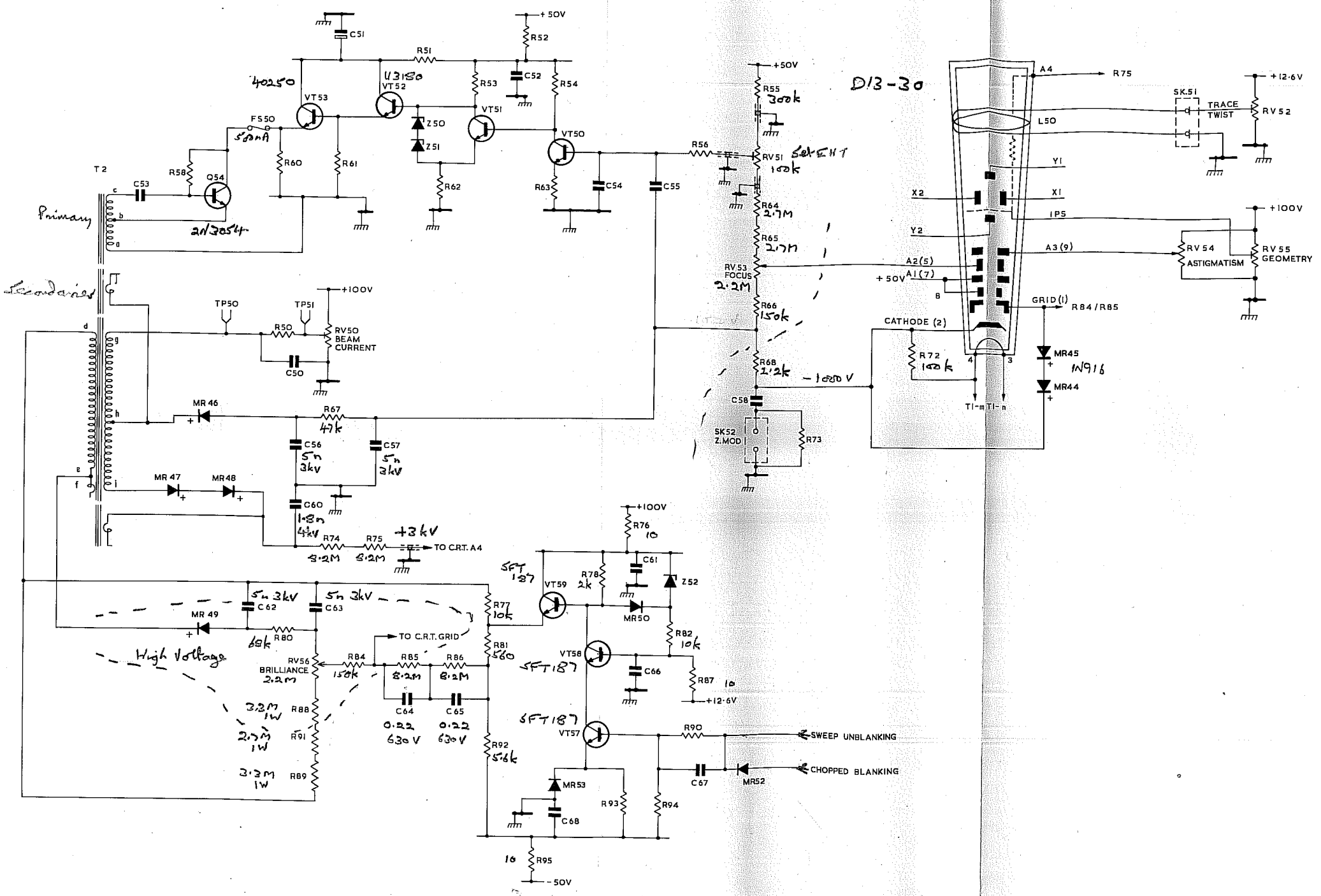

CDU 110 EHT AND CRT

FIG.10 A
AL3 OCT. 1967